Maintenance & Service Guide

Presario 2250 Series
2510, 2410 ES & 4240 ES Models

Product Description

Troubleshooting

Illustrated Parts

Removal & Replacement

Jumpers & Switches

Specifications

Pin Assignments

Power Cord Set Requirements

Compaq Presario Series 2250 Series, 2510 Model

Compaq Presario Series 2410 ES and 4240 ES Models

Click here to download this Maintenance and Service Guide (MSG) to your hard drive.

Welcome to the Maintenance & Service Guide (MSG) for the Compaq Presario 2250, 2510, 2410ES, and 4240 ES Series. This online guide is designed to serve the needs of those whose job it is to repair Compaq products. Many of the components of the hardcopy MSG are contained in this online guide. This Notice, contains the copyright and trademark information. The Preface shows symbol conventions, technician notes and serial number locations on the unit.

Back to Top

Preface

Symbols

The following words and symbols mark special messages throughout this guide.

⚠	**WARNING:** Text set off in this manner indicates that failure to follow directions in the warning could result in bodily harm or loss of life.
⚠	**CAUTION:** Text set off in this manner indicates that failure to follow directions in the caution could result in damage to equipment or loss of data.

IMPORTANT:	Text set off in this manner presents clarifying information or specific instructions.
NOTE:	Text set off in this manner presents commentary, sidelights, or interesting points of information.

Technician Notes

⚠	**WARNING:** Only authorized technicians trained by Compaq should repair this equipment. All troubleshooting and repair procedures are detailed to allow only subassembly/module level repair. Because of the complexity of the individual boards and subassemblies, the user should not attempt to make repairs at the component level or to make modifications to any printed circuit board. Improper repairs can create a safety hazard. Any indications of component replacement or printed circuit board modifications may void any warranty.

Serial Number

When requesting information or ordering spare parts, the computer serial number should be provided to Compaq. The serial number can be found on the right side of the computer's hood.

Locating Additional Information

The following documentation is available to support this product:

- Compaq Presario documentation set
- *Introducing Windows 95 Guide*
- Service Training Guides
- Compaq Service Advisories and Bulletins
- *Compaq QuickFind*
- *Compaq Service Quick Reference Guide*
- *Compaq Help Center*

Product Description

Models

Controls & Lights

Power Management

This section describes the model numbers and features of the Compaq 2250, 2510, 2410 ES and 4240 ES Series of Personal Computers.

Compaq Presario Series 2250 Series, 2510 Model

Compaq Presario Series 2410 ES and 4240 ES Models

Product Description

Models

The following table lists Compaq Presario Series Personal Computer models and some model-specific features.

Compaq Presario 2250 Series Personal Computers Standard Configurations U. S., Latin America, Canada						
Model	**AMD K6 Processor (MHz)**	**Hard Drive (GB)**	**Memory (MB)**	**Video Memory (MB)**	**Fax/Modem (Kbps)**	**CD Drive**
2253	233	4.0	32	2	56	
2254	266 MMX	4.0	32	2	56	32x
2255	266 MMX	6.0	32	2	56	32x
Compaq Presario 2510 Series Personal Computers Standard Configurations U. S.						
Model	**AMD K6 Processor (MHz)**	**Hard Drive (GB)**	**Memory (MB)**	**Video Memory (MB)**	**Fax/Modem (Kbps)**	**CD Drive**
2510	266 MMX	4.0	32	2	56	32x
Compaq Presario 2250 Series Personal Computers Standard Configurations Europe, Middle East, Africa						
Model	**AMD K6 Processor (MHz)**	**Hard Drive (GB)**	**Memory (MB)**	**Video Memory (MB)**	**Fax/Modem (Kbps)**	**CD Drive**
2253	233 MMX	4.0	32	2	None	32x
2254	266 MMX	3.2	32	2	56	32x
Compaq Presario 2250 Series Personal Computers Asia/Pacific						
Model	**AMD K6 Processor (MHz)**	**Hard Drive (GB)**	**Memory (MB)**	**Video Memory (MB)**	**Fax/Modem (Kbps)**	**CD Drive**
2254	266	3.2	32	2	56	32x
Compaq Presario 2250 Series Personal Computers Japan						
Model	**AMD K6 Processor (MHz)**	**Hard Drive (GB)**	**Memory (MB)**	**Video Memory (MB)**	**Fax/Modem (Kbps)**	**CD Drive**
2254	233	3.2	48	2	56	32x
Compaq Presario 2410 ES Series Personal Computers Standard Configuration						
Model	**AMD K6 Processor (MHz)**	**Hard Drive (GB)**	**Memory (MB)**	**Video Memory (MB)**	**Network Interface Controller (NIC)**	**CD Drive**
2410 ES	266	4.0	32	2	Netelligent 10/100Mbps PCI NIC	32x
Compaq Presario 4240 ES Series Personal Computers Standard Configuration						
Model	**Pentium II Processor (MHz)**	**Hard Drive (GB)**	**Memory (MB)**	**Video Memory (MB)**	**Network Interface Controller (NIC)**	**DVD Drive**
4240 ES	333	8.0	48	4	Netellegent 10/100Mbps PCI NIC	32x

Controls and Lights

Controls & Lights

Easy Access Buttons & Lights

Standard Keyboard

Easy Access Internet Keyboard

Rear Connectors
2250 Series, 2410ES, 2510

Rear Connectors
4240ES

Power Management

This section covers the computer controls and lights for the Compaq Presario 2410 ES, 4240 ES, 2510, and 2250 Series of Personal Computers.

Easy Access Buttons and Lights

Controls and Lights

Easy Access Buttons & Lights

Standard Keyboard

Easy Access Internet Keyboard

Rear Connectors
2250 Series, 2410ES, 2510

Rear Connectors
4240ES

Power Management

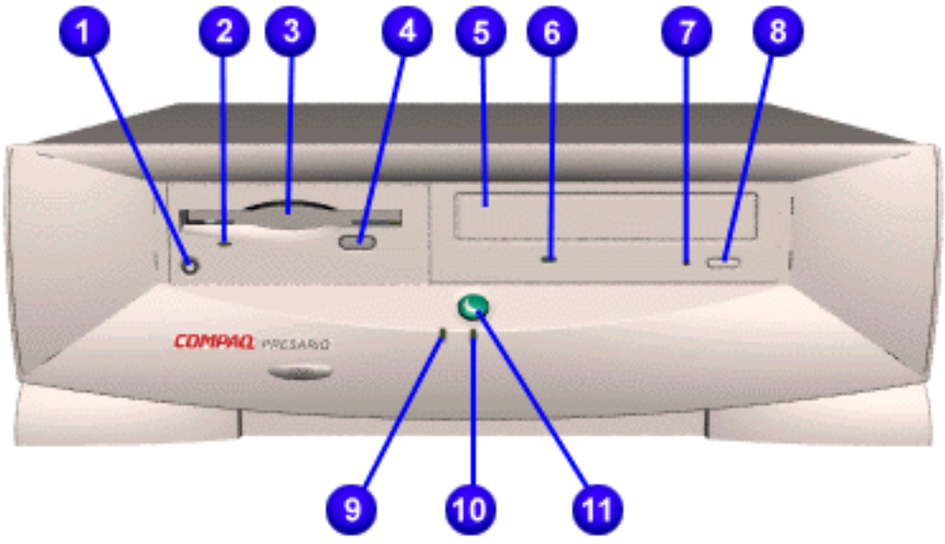

Presario 2250 Series, 2510 Model shown

1.	Headphone jack (select models)
2.	Diskette Drive Activity Light
3.	Diskette Insertion Slot
4.	Diskette Eject Button
5.	CD (or DVD) Drive Tray
6.	CD (or DVD) Drive Activity Light
7.	CD/DVD Drive Manual Eject Access
8.	CD/DVD Drive Load/Eject Button
9.	Hard Drive Activity Light
10.	Power Status Light
11.	Sleep Button

Product Description

Standard Keyboard Lights

Controls and Lights

Easy Access Buttons & Lights

Standard Keyboard

Easy Access Internet Keyboard

Rear Connectors
2250 Series, 2410ES, 2510

Rear Connectors
4240ES

Power Management

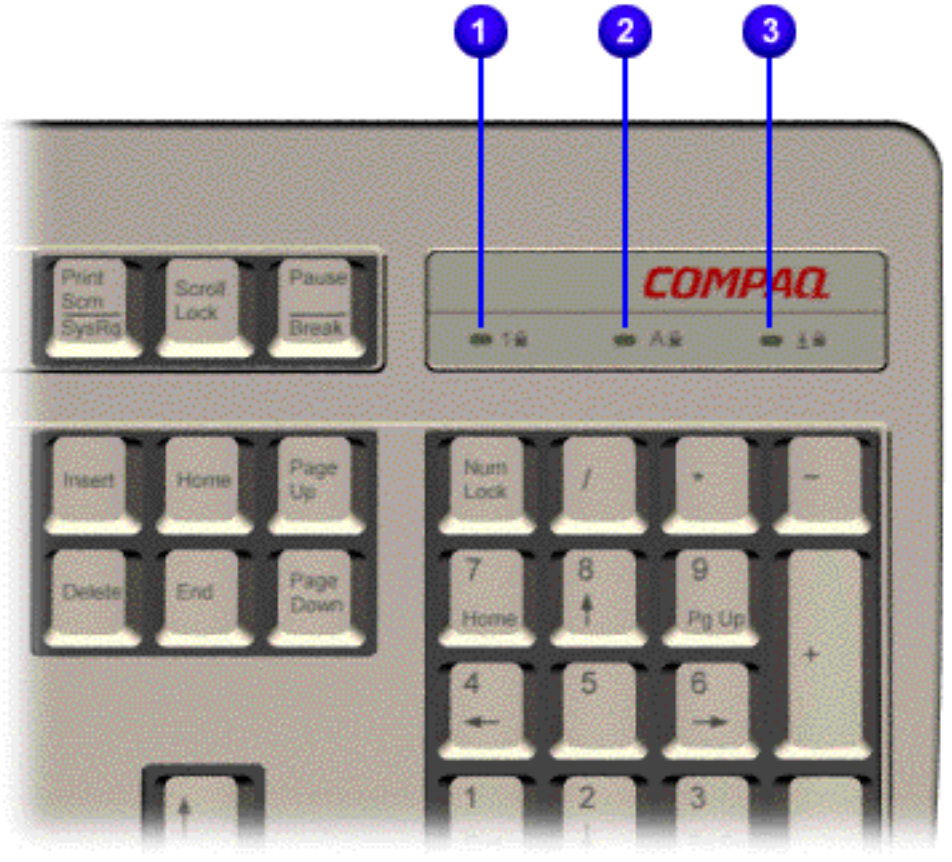

1. Num Lock Light
2. Caps Lock Light
3. Scroll Lock Light

Easy Access Internet Keyboard Controls & Lights

Controls and Lights

Easy Access Buttons & Lights

Standard Keyboard

Easy Access Internet Keyboard

Rear Connectors
2250 Series,, 2410ES, 2510

Rear Connectors
4240ES

Power Management

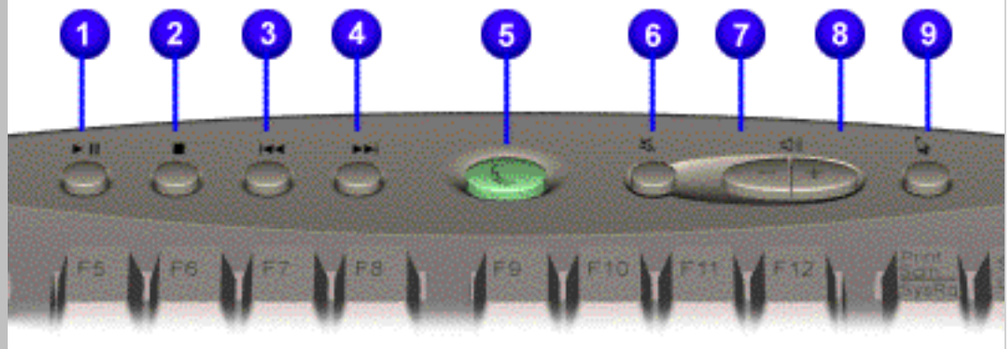

Easy Access Buttons

Easy Access Buttons	
1.	Play/Pause
2.	Stop
3.	Previous track
4.	Next track
5.	Sleep
6.	Mute
7.	Volume up
8.	Volume down
9.	Launch favorite application

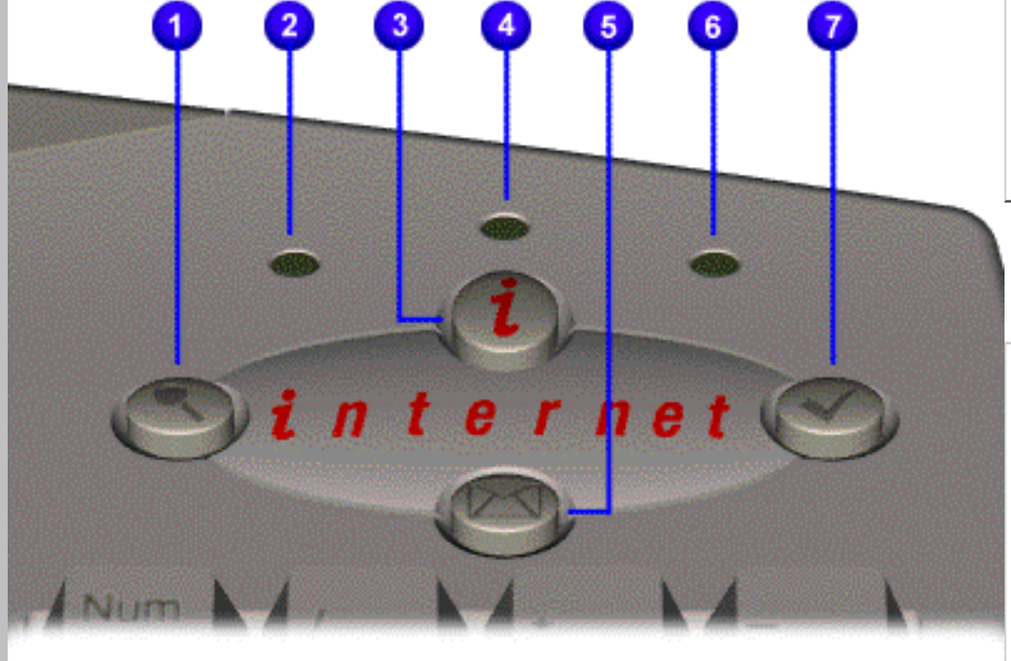

Internet Suite Buttons

Internet Suite Buttons	
1.	Instant Search
2.	NumLock Light
3.	Instant Internet
4.	Caps Lock Light
5.	Instant E-mail
6.	Scroll Lock Light
7.	Featured Web site

Rear Connectors

Models: 2250 Series, 2410 ES, 2510

Controls and Lights

Easy Access Buttons & Lights

Standard Keyboard

Easy Access Internet Keyboard

Rear Connectors
2250 Series, 2410ES, 2510

Rear Connectors
4240ES

Power Management

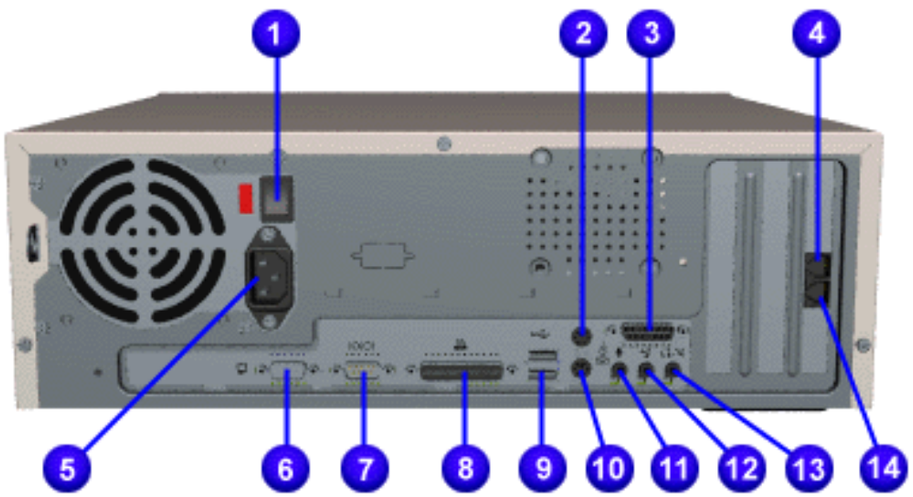

Presario 2250 Series, 2510, 2410 ES Models

1.	Main Power (On/Off) Switch
2.	Mouse
3.	MIDI/Gamepad/Joystick
4.	Telephone Line to Telephone
5.	AC Power Cord
6.	VGA Monitor
7.	Serial Port
8.	Parallel/Printer Port
9.	USB Connectors (2)
10.	Keyboard
11.	Microphone-in
12.	Audio Line-out
13.	Speaker-out
14.	Telephone Line to Wall

Rear Connectors

Model: 4240 ES

Controls and Lights

Easy Access Buttons & Lights

Standard Keyboard

Easy Access Internet Keyboard

Rear Connectors
2250 Series, 2410ES, 2510

Rear Connectors
4240ES

Power Management

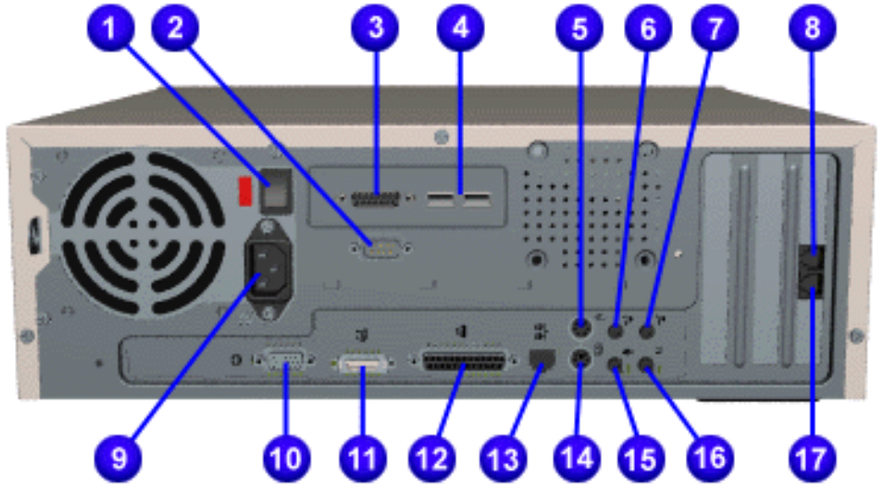

Presario 4240ES Model

1.	Main Power (On/Off) Switch
2.	Serial
3.	MIDI/Gamepad/Joystick
4.	USB Connectors (2)
5.	Mouse
6.	Audio Line Out
7.	Audio Line In
8.	Telephone Line to Wall Jack
9.	AC Power Cord
10.	VGA Monitor
11.	Serial
12.	Parallel/Printer Port
13.	USB
14.	Keyboard
15.	Microphone
16.	Speaker-out
17.	Telephone Line to Telephone

Power Management Features

Controls and Lights

Easy Access Buttons & Lights

Standard Keyboard

Easy Access Internet Keyboard

Rear Connectors
2250 Series, 2410ES, 2510

Rear Connectors
4240 ES

Power Management

Compaq Presario 2250, 2510, 2410 ES and 4240 ES Series Personal Computers support the following power management capabilities.

- Sleep (standby)
- APM 1.2

Select the power management features for your operating system: Windows 95 or Windows 98.

Windows 95

- The system enters Sleep when **Windows Suspend** is selected, when the Sleep button is pressed, or when the system times out.
- The system supports the Medium power setting, which allows the unit to enter Sleep mode without losing its network connection.
- In the Windows 95 desktop, select **Start,** then **Shutdown** to put the system into Sleep mode. The system can then be turned off or left in Sleep. When the Sleep button is pressed, the system reboots to the Windows 95 Desktop.
- The default setting for Sleep timeout is 30 minutes. The Sleep timeout value is set in the BIOS Setup.
- The modem wakes up the system on incoming calls when configured to expect a call.
- When an audio CD is playing, the system will time out and enter Sleep after 30 minutes, but audio play will not be interrupted. If the Sleep button is pressed or if Suspend is selected, CD play is suspended and the unit enters Sleep. CD play resumes on the next track when the system wakes.
- The software and hardware volume control buttons are synchronized.

States of Power Management

Power management can be defined by three distinct power states in which the computer operates: On, Off, and Sleep. The following table describes the energy states and lists the power consumption of each state:

Power Management States		
Energy State	**Description**	**Power Consumption**
On	Power is available to the system and the **On/Off** switch in the back is in the **ON** position. The power status light is green.	35 Watts Avg., 75 Watts Max (2250 Series, 2510, 2410 ES) 55 Watts Avg., 110 Watts Max (4240 ES)
Off	Power is not available to the system and the **On/Off** switch is in the **OFF** position. The power status light is not lit.	0 Watts
Sleep	Power is available to the system, the **On/Off** switch in the back is in the **ON** position and the computer is in a low power/standby mode. The power status light is amber.	> 30 Watts (4240ES Series) 20 Watts (2250 Series, 2510, & 2410 ES)

Windows 98

- **Power Status Lights**. You can quickly tell the sleep condition of the system by glancing at the Power Status Lights.
- Automatic standby. In Windows 98 there are different Power Schemes under which the system goes into Sleep mode automatically when it times out. The optional settings for Windows 98 are **Home/Office Desk**, **Portable/Laptop** and **Always On**. The system supports different levels of power management for varying patterns of computer use.
- Default and Adjustable timeout settings. The default setting for Sleep timeout is 30 minutes. The Sleep timeout value can be set in the **Control Panel** by clicking on the **Power Management** icon. At the **Properties** screen, click, in turn, on **System Standby**, **Turn off Monitor**, and **Turn off Hard Disk** to set the time before the system goes to sleep.
- Manual standby. To manually put your computer into sleep mode in the Windows 98 desktop, press the **Instant On** button (on the CPU) or the **Sleep** button (keyboard). The power status light on the CPU will light to show that Sleep mode is activated.
- Other manual standby options. Another way to put your computer into sleep mode manually under Windows 98 is to select **Start,** then **Shutdown**. Select **Standby** from the list of choices to put the system into Sleep mode. The system can then be turned off or left in Sleep. When the Sleep button is pressed, the system reboots to the Windows 98 Desktop.
- No audio CD interruption. When an audio CD is playing, the system will time out and enter Sleep after 30 minutes or the set time, but audio play will not be interrupted. If either the **Instant On** or the **Sleep** button is pressed, CD play is suspended and the unit enters Sleep. CD play resumes on the next track when the system wakes.
- Synchronized software and hardware volume control buttons.

States of Power Management

Power management can be defined by three distinct power states in which the computer operates: On, Off, and Sleep. The following table describes the energy states and lists the power consumption of each state:

Power Management States		
Energy State	**Description**	**Power Consumption**
On	Power is available to the system and the **On/Off** switch in the back is in the **ON** position. The power status light is green.	64 Watts Avg., 110 Watts Max
Off	Power is not available to the system and the **On/Off** switch is in the **OFF** position. The power status light is not lit.	0 Watts
Sleep	Power is available to the system, the **On/Off** switch in the back is in the **ON** position and the computer is in a low power/standby mode. The power status light is amber.	23 Watts

---

Troubleshooting

This section provides troubleshooting information for the Compaq Presario 2250, 2510, 2410 ES, and 4240 ES Series Computers. Adherence the procedures and precautions described in this section is essential for proper service. The basic steps for troubleshooting include:

1. Clearing CMOS.
   4240 ES Model or 2250 Series, 2510, 2410 ES Models.

2. Running the Power-On Self-Test (POST).

3. If you are unable to run POST you may Troubleshoot without Diagnostics.

Perform the recommended actions in the order listed. Rerun POST after each recommended action until the problem is solved and no error message occurs. Once the problem is solved, do not complete the remaining recommended actions.

4. Run the Compaq Utilities Test Program. Diagnostic error codes occur if the system recognizes a problem while running the Compaq Utilities. These error codes help identify possible defective subassemblies.

NOTE: If the problem is intermittent, check the computer several times to verify that the problem is solved.

Clearing CMOS

Model: 4240 ES

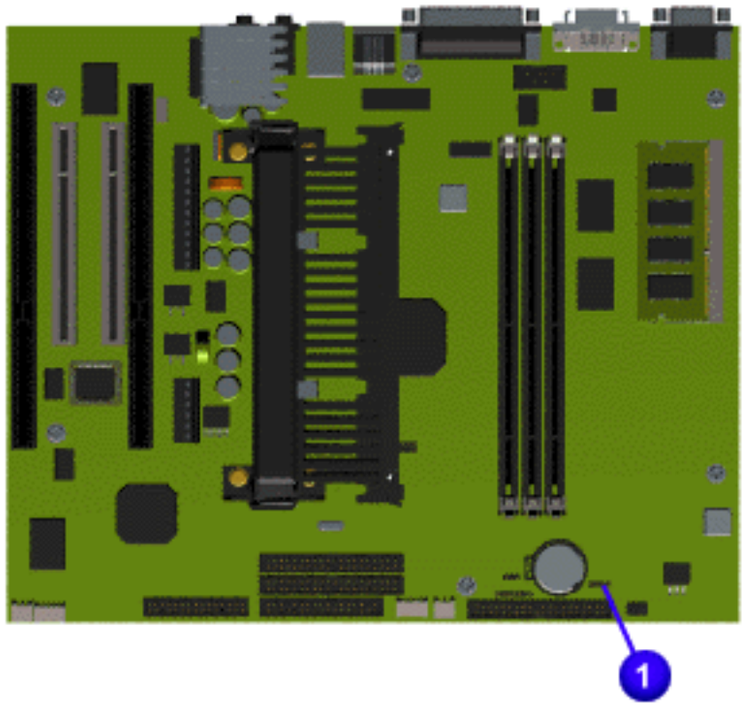

If the power-on password is not known, clearing CMOS will disable the power-on password. To clear CMOS, complete the following steps:

1. Complete the preparation for disassembly procedures.
2. Remove the hood.
3. Remove the jumper 1 from pins 01-02 and place on pins 02-03, then replace on pins 01-02.
4. Replace the hood and perform the desired troubleshooting.

NOTE: The jumper pins are labeled CLEAR on the system board.

.

Preparing for Disassembly

ESD

Service

Cable Positions

Preparing for Disassembly

Removal & Replacement Procedures

To prepare the computer for the removal and replacement procedures, complete the following steps:

1. Remove any diskette, compact disc (CD), or Digital Versatile Disk (DVD) from the computer.

2. Turn off the computer and any peripheral devices that are connected to the computer.

CAUTION: The computer power switch should be turned off before you disconnect any cables.

3. Disconnect the power cord from the electrical outlet, then from the computer.

4. Disconnect all peripheral device cables from the computer.

IMPORTANT: During disassembly, label each cable as you remove it. Be sure to note the position and routing of each cable before removal.

Removal and Replacement

Removing the Hood

Disassembly Sequence

Hood
Air Baffle
Drive Cage
Mass Storage
Front Bezel
Speakers
Button Board & Cable
Headphone Board
Power Supply
Processor AMD Pentium II
Modem
NIC
Memory
RTC Battery
Serial Cable
System Board

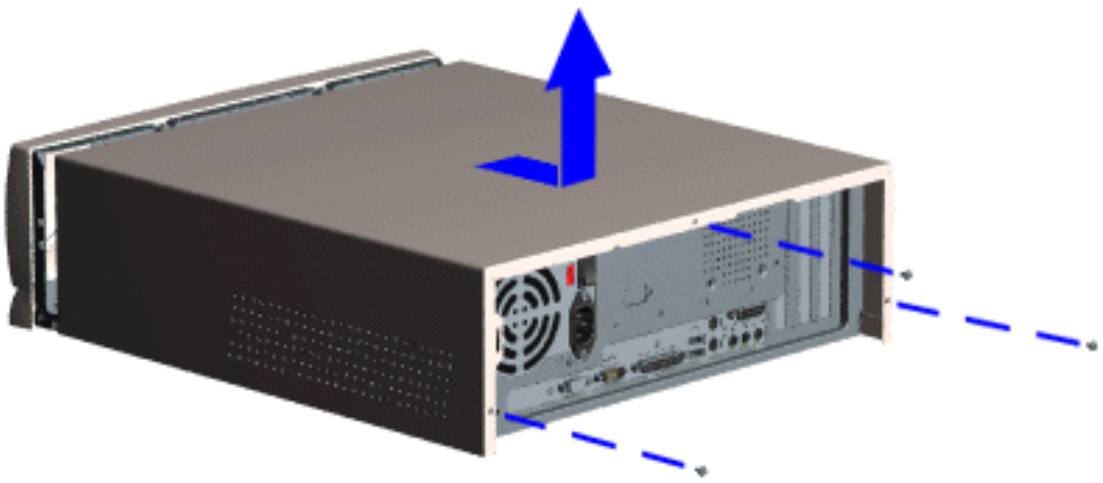

1. Perform the preparation procedures.
2. Remove the three screws from the rear of the computer.
3. Slide the hood back, then lift up.

End of sequence. To replace the hood, reverse this procedure.

Clearing CMOS

Models: 2250 Series, 2410 ES, 2510

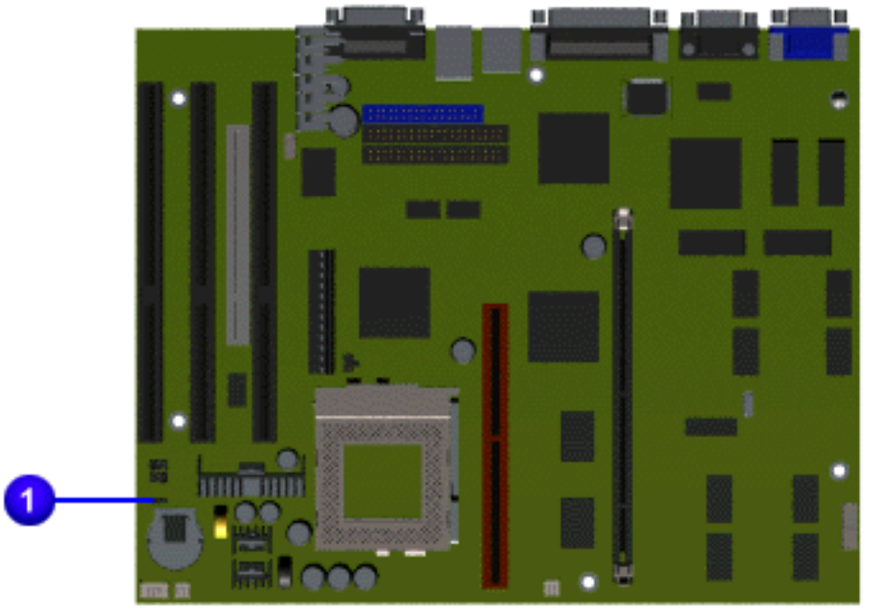

If the power-on password is not known, clearing CMOS will disable the power-on password. To clear CMOS, complete the following steps:

1. Complete the preparation for disassembly procedures.
2. Remove the hood.
3. Remove the jumper 1 from pins 01-02 and place on pins 02-03, then replace on pins 01-02.
4. Replace the hood and perform the desired troubleshooting.

NOTE: The jumper pins are labeled CLEAR on the system board.

Power-On Self Test (POST)

POST is a series of diagnostic tests that run automatically when the system is turned on. If POST finds an error in the system, an error condition is indicated by an audible and/or visual message.

Click here for a listing of possible error messages and solutions.

NOTE: An external speaker must be installed into the speaker output connector in order to hear beeps during POST.

After the computer is turned on, POST checks the following assemblies to ensure that the computer system is functioning properly:

- Keyboard
- System board
- Memory modules
- Video memory
- Diskette drive
- Hard drive
- CD (or DVD) drive
- Power supply

POST also detects the type of mass storage devices installed in the computer.

POST Error Messages

An error message displays if the POST encounters a problem. This test automatically runs each time the system is turned on, checking assemblies within the computer and reporting any errors found.

Click on an item for explanations of the error codes and a recommended course of action.

Error Code Message Samples		
Diskette Drive A or B Error	Failing Bits nnn	Fixed Disk Controller Failure
Extended RAM failed at offset nnn	Fixed Disk 0 or 1 Failure	Incorrect Drive A Type
Invalid NVRAM Media Type	Keyboard Controller Error	Keyboard Error
Operating System Not Found	Parity Check 1	Parity Check 2
Real Time Clock Error	System Battery is Dead	System BIOS Shadowed
System Cache Error	System CMOS Checksum Bad	System RAM Failed at Offset, nnn
System Timer Error	UMB Upper Limit Segment Address nnn	Video BIOS Shadowed

Diskette Drive A or B Error

Probable Cause	Recommended Action
Drive A: is present, but fails the BIOS POST diskette tests	1. Run Setup. 2. Replace the signal cables. 3. Replace the drive. Back to Top

Extended RAM failed at offset *nnn*

Probable Cause	Recommended Action
Extended memory not working or not configured properly	1. Replace the memory modules. 2. Replace the system board. Back to Top

Failing Bits *nnn*

Probable Cause	Recommended Action
nnn is a map of the bits at the RAM address which failed the memory test	1. Run Setup. 2. Replace the system board. Back to Top

Fixed Disk 0 or 1 Failure

Probable Cause	Recommended Action
Hard drive is not working or configured properly	1. Run Setup. 2. Replace the signal cable. 3. Replace the hard drive. Back to Top

Fixed Disk Controller Failure

Probable Cause	Recommended Action
Hard drive is not working or configured properly	1. Run Setup. 2. Replace the system board. Back to Top

Incorrect Drive A Type

Probable Cause	Recommended Action
Type of diskette drive A: not correctly identified	1. Run Setup. 2. Replace the diskette drive. Back to Top

Invalid NVRAM Media Type

Probable Cause	Recommended Action
Problem with NVRAM (CMOS) access	Replace the system board. Back to Top

Keyboard Controller Error

Probable Cause	Recommended Action
Keyboard, I/O keyboard controller (on system board) or mouse error	1. Replace the keyboard. 2. Replace the mouse. 3. Replace the system board. Back to Top

Keyboard Error

Probable Cause	Recommended Action
Keyboard, I/O keyboard controller (on system board) or mouse error	1. Replace the keyboard. 2. Replace the mouse. 3. Replace the system board. Back to Top

Operating System Not Found

Probable Cause	Recommended Action
Operating system cannot be located on either drive A: or C:	Run Setup. Back to Top

Parity Check 1

Probable Cause	Recommended Action
Parity error found in the system bus	1. Run Setup. 2. Replace the memory modules. 3. Replace the system board. Back to Top

Parity Check 2

Probable Cause	Recommended Action
Parity error found in the I/O bus	1. Run Setup. 2. Replace the ISA board (modem). Back to Top

Real Time Clock Error

Probable Cause	Recommended Action
Real-time clock fails BIOS test	Replace the system board. Back to Top

System Battery is Dead

Probable Cause	Recommended Action
RTC battery is dead	1. Replace the RTC battery. 2. Run Setup. Back to Top

System BIOS Shadowed

Probable Cause	Recommended Action
System BIOS copied to Shadow RAM	Replace the system board. Status message only; no action required. Back to Top

System Cache Error

Probable Cause	Recommended Action
RAM cache failed the BIOS test	Run Setup. Back to Top

System CMOS Checksum Bad

Probable Cause	Recommended Action
CMOS is corrupted or modified incorrectly	Run Setup. Back to Top

System RAM Failed at Offset, *nnn*

Probable Cause	Recommended Action
System RAM failed	Replace memory modules. Back to Top

System Timer Error

Probable Cause	Recommended Action
DMA, timers, etc.	Replace the system board. Back to Top

UMB Upper Limit Segment Address *nnn*

Probable Cause	Recommended Action
Displays the address *nnn* of the upper limit of Upper Memory Blocks, indicating released segments of the BIOS	Run Setup. Status message only; no action required. Back to Top

Video BIOS Shadowed

Probable Cause	Recommended Action
Video BIOS successfully copied to shadow RAM	Run Setup. Status message only; no action required. Back to Top

Troubleshooting without Diagnostics

If you encounter some minor problem with the computer or software application, go through the following checklist for possible solutions before running any of the Diagnostic utilities:

- Is the computer connected to a working power outlet?
- Is the computer turned on and the power light illuminated?
- Are all cables connected properly and seated?
- Are all of the necessary device drivers installed?
- Is the *CONFIG.SYS* file correct?
- Is the *AUTOEXEC.BAT* file (MS-DOS) or *DOSSTART.BAT* file correct?
- Was a non-bootable diskette loaded in the diskette drive at power-up?
- Are all CMOS settings correct?

Click on a selection below identify some quick checks for common problems.

Power	Monitor	CD Drive	USB
Diskette Drive	Hard Drive	DVD Drive	Resolving Hardware Conflicts

Back to Top

Solutions for Power Problems	
Problem	**Possible Solution**
Computer will not turn on	Ensure that the computer is connected to a working power source.
Computer does not automatically display the date and time	The real-time clock (RTC) battery may need to be replaced. See Removal and Replacement Procedures.
Computer does not beep during POST	The speaker volume may have been turned down. Push the volume control buttons on the computer and adjust the volume or select the Volume option from the Control Panel.
Computer powered off automatically	1. The unit may be in Sleep. If the amber light on the front bezel is on, then the unit is in Sleep. 2. The unit temperature may have been exceeded. Check the fan for function and blockage.

Back to Top

Diskette Drive Problems	
Problem	**Possible Solution**
Diskette drive light stays on	1. Diskette may be damaged. From the Windows desktop, click on the Start button. Choose Programs=>Accessories=> System Tools=>Scandisk to check for problems. 2. Diskette may be installed incorrectly. Remove the diskette and reinsert. 3. Software program may be damaged. Check the program diskettes.
Diskette drive cannot write to a diskette	1. Diskette is not formatted. Format the diskette. 2. Diskette is write-protected. Either use another diskette that is not write-protected, or disable the write protection on the diskette. 3. Writing to the wrong drive. Check the drive letter in your path statement. 4. Not enough space is left on the diskette. Use another diskette to write the information.
Diskette drive cannot read a diskette	1. Diskette is not formatted. Format the diskette. 2. Using the wrong diskette type for the drive type. Use a diskette that is compatible with the drive. 3. Reading the wrong drive. Check the drive letter in your path statement. 4. Diskette drive has been disabled by Setup. Run Setup and enable the diskette drive.

Back to Top

Solutions for Monitor Problems	
Problem	**Possible Solution**
Characters are dim	The brightness control is not set properly. Adjust the brightness control.
Screen is blank	1. A screen-blanking (energy-saving) utility could be installed. Press any key. If the display reappears, you have a screen-blanking utility installed. 2. The brightness needs adjusting. Adjust the brightness control. 3. Screen saver has been initiated. Press any key or move the mouse to light the screen. 4. System is in Sleep mode. Press the Sleep button to wake up.
Garbled characters on the screen or mixed with text	The ANSI.SYS driver is not in the *CONFIG.SYS* file. Add the ANSI.SYS driver to the *CONFIG.SYS* file by inserting the following line: DEVICE = C:\ANSI.SYS
Monitor overheats	There is not enough ventilation space for proper airflow. Leave at least 3 inches (7.6 cm) of ventilation space. Also, be sure there is nothing on top of the monitor to obstruct airflow.
Cursor will not move using the arrow keys on the numeric keypad	1. The Num Lock key is on. Press the Num Lock key. The Num Lock light should not be on when you want to use the arrow keys. 2. Possible application error. Restart the computer.

Back to Top

Solutions for Hard Drive Problems	
Problem	**Possible Solution**
Hard drive error occurs	Hard disk has bad sectors or has failed. Run Setup. Reformat the hard disk.
Disk transaction problem	The directory structure is bad or there is a problem with a file. From the Windows desktop, click on the Start button. Choose Programs=>Accessories => System Tools=>Scandisk to check for problems. If problems exist, run Scandisk and click on the "Automatically fix errors" checkbox at the bottom to correct the problems. If a large number of lost allocation units is found, click on the Start button. Choose Programs => Accessories=>System Tools=>Disk Defragmenter.
Drive not found	Cable could be loose. Check cable connections.
Nonsystem disk message	1. The system is trying to start from a diskette that is not bootable. Remove the diskette from the diskette drive. 2. The system is trying to start from the hard drive but the hard disk has been damaged. Insert a bootable diskette into the diskette drive and restart the computer with Ctrl+Alt+Del. 3. Diskette boot has been disabled in Setup. Run Setup and enable diskette boot.
Hard drive operation seems slow	The hard disk files may be fragmented. From the Windows desktop, click on the Start button. Choose Programs =>Accessories =>System Tools =>Scandisk to check for problems. If problems exist, run Scandisk and checkmark the "Automatically fix errors" box at the bottom to correct the problems. If a large number of lost allocation units is found, click on the Start button. Choose Programs => Accessories=>System Tools=> Disk Defragmenter.
Hard drive activity light is not on, or stays on without blinking	The hard disk files may be fragmented. From the Windows desktop, click on the Start button. Choose Programs=> Accessories => System Tools=>Scandisk to check for problems. If problems exist, run Scandisk and checkmark the "Automatically fix errors" box at the bottom to correct the problems. If a large number of lost allocation units is found, click on the Start button. Choose Programs=> Accessories => System Tools=> Disk Defragmenter.

Back to Top

Solutions for CD Drive Problems	
Problem	**Possible Solution**
Cannot read compact disc	1. CD is not properly seated in the drive. Eject the CD, press down on the CD firmly to correctly seat it in the drive, then reload. 2. CD has been loaded upside down. Eject the CD, turn it over, then reload. 3. CD may be dirty or scratched. Load another CD.
Cannot eject compact disc	CD is not properly seated in the drive. Turn off the computer, insert a thin metal rod into the emergency eject hole, then push firmly (a straightened paper clip can be used). Slowly pull the tray out from the drive until the tray is fully extended, then remove the CD.
CD drive devices are not detected; drivers is not loaded	1. CD drive is not connected properly. Open the computer and check to see that the drive cable is connected properly. 2. Ensure the correct driver is installed in *CONFIG.SYS*. 3. If drive has been changed, make sure the jumper setting is set for "Slave."

Back to Top

Solutions for DVD Drive Problems	
Problem	**Possible Solution**
Cannot read DVD disk	1. DVD or CD is not properly seated in the drive. Eject the DVD or CD, press down on the DVD or CD firmly to correctly seat it in the drive, then reload. 2. DVD or CD has been loaded upside down. Eject the disk, turn it over, then reload. 3. DVD or CD disk may be dirty or scratched. Load another DVD disk.
DVD does not work in the DOS mode.	Proper drivers are not loaded. Restart the system and make sure the DVD drive drivers are loaded.
Cannot eject DVD disk	1. The system is in the Sleep mode. Press the Power button to bring the system back to full power, then eject the DVD. 2. The DVD, diskette, or hard drive was active when attempting to eject the DVD. Wait until all drive activity ends (the CD/hard drive light and diskette drive light will go out), then try to eject the DVD. 3. DVD disk is not properly seated in the drive. Turn off the computer, insert a thin metal rod into the emergency eject hole (a straightened paper clip can be used), then push firmly. Slowly pull the tray out from the drive until the tray is fully extended, then remove the DVD disk.
DVD drive devices are not detected; drivers is not loaded	1. DVD drive is not connected properly. Open the computer and check to see that the drive cable is connected properly. 2. Ensure the correct driver is installed in *CONFIG.SYS*. 3. If drive has been changed, make sure the jumper setting is set for "Slave."
Proper drivers are not loaded.	Restart the system and make sure the DVD drive drivers are loaded.

Back to Top

Solutions for USB Problems	
Problem	**Possible Solution**
USB device does not work with the system.	The USB device and the system may use different USB architectures. Ensure that the USB device and the system share the same USB architecture. (UHCI-compliant devices will only work with a UHCI-compliant system, and OHCI-compliant devices will only work with a OHCI-compliant system).

Back to Top

Resolving Hardware Conflicts

Hardware conflicts occur when two or more peripheral devices attempt to use the same hardware resources. I/O addresses, interrupts, and DMA channels are the most common hardware resources used by peripheral devices. For example, the factory default settings for the MIDI port audio interface are:

Audio Interface	
Base I/O address	220H
MIDI Port Base I/O address	330H
Interrupt	IRQ 5
8-bit DMA	Channel 1

When different peripheral devices use the same hardware resources at the same time, the devices and/or the system may not function properly. You can resolve hardware conflicts by ensuring that no devices are configured to use the same hardware resources. These resources can either be dipswitch or jumper settings on the peripheral card or software configurable resources. The Computer Setup selection of your Compaq Utilities allows you to view and modify the settings for the peripheral devices factory installed in your system. Refer to the *User's Guide* for the particular peripheral cards you wish to install for information on how to view and select their settings.

To resolve hardware conflicts:

1. Change the hardware settings of your audio card or other peripheral card in your system if the peripheral card is using any settings used by the factory-installed devices.

2. If you are unsure of the settings of the peripheral cards, you can isolate the source of the problem by temporarily removing all cards not manufactured by Compaq, or resetting the default settings and running Compaq Utilities. After that, add the cards back one at a time until the card that is causing the conflict is found.

Running Compaq Utilities

Configuration & Diagnostics

Preparing the Computer

Computer Setup

Compaq Utilities Diskette

Running Compaq Utilities

Computer Check Up (TEST)

View System Information (INSPECT)

To run Compaq Utilities, turn on or reboot the computer with the *Compaq Utilities* diskette in the diskette drive. The following menu appears:

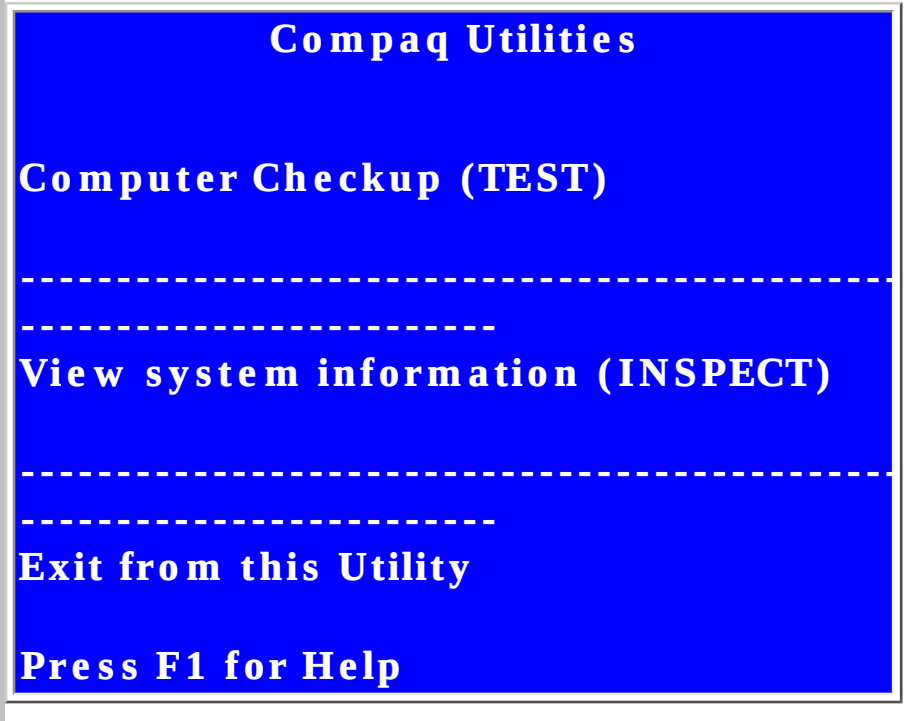

Configuration and Diagnostics

Configuration & Diagnostics

Preparing the Computer

Computer Setup

Compaq Utilities Diskette

Running Compaq Utilities

Computer Check Up (TEST)

View System Information (INSPECT)

These sections explain how to use Setup and Compaq Utilities.

- Windows 95, Windows 98, and MS-DOS have configuration and diagnostics utilities that should be accessed in the following instances:
- When a system configuration error is detected during the Power-On Self-Test (POST).
- To change factory default settings for some of the computer features.
- To change the system configuration, which is sometimes necessary when you add or remove optional hardware.
- To set system configuration features.

Preparing the Computer

Configuration and Diagnostics

Preparing the Computer

Computer Setup

Compaq Utilities Diskette

Running Compaq Utilities

Computer Check Up (TEST)

INSPECT

If you encounter an error condition, complete the following steps before starting problem isolation procedures:

1.Ensure proper ventilation. The computer should have a 3-inch (7.6-cm) clearance
at the back of the system unit.

2.Turn off the computer and peripheral devices.

> **CAUTION**:Make sure the power is off before disconnecting or reconnecting the mouse, keyboard, or any other peripheral devices. Disconnecting or connecting peripheral devices while the unit power is on can damage the system board.

3.Disconnect any peripheral devices other than the monitor and keyboard. Do not disconnect the printer if you want to test it or use it to log error messages.

4.Install loop-back and terminating plugs for complete testing.

Computer Setup

Configuration and Diagnostics
Preparing the Computer
Computer Setup
Compaq Utilities Diskette
Running Compaq Utilities
Computer Check Up (TEST)
View System Information (INSPECT)

The Setup utility gives a snapshot of the computer's hardware configuration, aids in troubleshooting, and sets custom features. Setup recognizes a new internal component or an external device and automatically updates the configuration screens. Use the Setup utility to:

- Modify settings for audio, storage, power management, communications, and input devices.
- Get an overall picture of the computer's hardware configuration.
- Verify configuration parameters in determining problems.
- Set time and date.

To access the Setup utility, turn on the computer and press the **F10** key when the Compaq logo appears. The following Setup menu displays:

NOTE: The menu displayed on your computer may vary slightly, depending on your configuration.

```
                    Phoenix BIOS

Main        Advanced        Security
      Power        Boot        Exit

Item Specific Help
System Time: [xx:xx:xx]
System Date: [xx/xx/xxxx]
Language: [English (US)] <Tab>, <Shift-
Tab>, or <Enter> selects field.
Legacy Diskette A: [1.44/1.25 Mb 3 "]

> Primary Master [XXXXMB]
> Primary Slave [DVD]

System Memory: XXX KB

Extended Memory: XXXXX KB


F1 Help á â Select Item -/+ Change
Values F9 Setup Defaults
Esc Exit ß à Select Menu Enter Select >
Sub-Menu F10 Previous Values
```

Compaq Utilities Diskette

Configuration and Diagnostics

Preparing the Computer

Computer Setup

Compaq Utilities Diskette

Running Compaq Utilities

Computer Check Up (TEST)

View System Information (INSPECT)

A Compaq Utilities diskette must be created in order to configure the system. To create a Compaq Utilities diskette, complete the following steps:

1. Insert the *QuickRestore* CD into the CD drive.
2. From the Windows desktop, click on **Start,** then **Programs,** and then **Windows Explorer.**
3. Click on the CD drive icon.
4. Double-click on the **Pcdiags** folder.
5. Insert a diskette into the diskette drive.
6. Double-click on the **QRST5.exe** icon.
7. Press **Enter** when the *QuickRestore* screen appears.
8. After the CD has finished copying to the diskette, eject the *QuickRestore* CD.

Computer Checkup (TEST)

Configuration and Diagnostics

Preparing the Computer

Computer Setup

Compaq Utilities Diskette

Running Compaq Utilities

Computer Check Up (TEST)

View System Information (INSPECT)

Computer Checkup (TEST) is a utility that determines if the various computer components installed in the system are recognized by the system and functioning properly. Running TEST after connecting a new device is optional, but advisable.

TEST helps analyze the system. This information allows the technician to reproduce the configuration of a computer on another computer for testing.

Running TEST

To run TEST, complete the following steps:

1. From the **Compaq Utilities** menu, select the **Computer Checkup (TEST)** option. A **Test Option** menu is displayed.
2. Select the option to view the device list. A list of the installed hardware devices is displayed.
3. Verify that the TEST utility correctly detected the devices installed.

NOTE: The TEST utility may not detect devices that are not manufactured by Compaq.

- **If the list is correct, select OK. The Test Option menu is displayed again.**
- **If the list is incorrect, be sure that any new devices are installed properly.**

4. Select one of the following from the Test Option menu:

- **Quick Check Diagnostics runs a quick, general test on each device with a minimal number of prompts. If errors occur, they are displayed when the testing is complete.**
- **Automatic Diagnostics runs unattended, maximum testing of each device with minimal prompts. You can choose how many times to run the tests, to stop on errors, or to print or file a log of errors.**
- **Prompted Diagnostics allows maximum control over the device testing process. You can choose attended or unattended testing, decide to stop on errors, or choose to print or file a log of errors.**

IMPORTANT: Attended testing allows data-destructive tests.

NOTE: When you run the TEST utility, be sure to record the error message numbers.

5. Follow the instructions on the screen as the diagnostic tests are run on the devices.

Diagnostic error codes occur if the system recognizes a problem while running the Compaq Utilities TEST program. These error codes help identify possible defective subassemblies.

When the testing is complete, the Test Option menu is displayed again.

6. Exit to the Compaq Utilities menu.

View System Information (INSPECT)

Configuration and Diagnostics

Preparing the Computer

Computer Setup

Compaq Utilities Diskette

Running Compaq Utilities

Computer Check Up (TEST)

INSPECT

The View System Information (INSPECT) utility provides information about the system once it has been configured. INSPECT operates with MS-DOS and provides information about the system operating environment, including:

- Contents of the operating system startup files
- Current memory configuration
- ROM version
- Type of processor and coprocessor
- Diskette, hard, CD and DVD drives
- Active printer and communications interfaces
- Modem

Home | Preface | Product Description | Troubleshooting | Illustrated Parts | Removal & Replacement
Jumpers & Switches | Specifications | Connector Pins | Power Cord Requirements

Diagnostic Error Codes

Diagnostic error codes occur if the system recognizes a problem while running the Compaq Utilities TEST program. These error codes help identify possible defective subassemblies.

IMPORTANT: Retest the system after completing each step. If the problem has been resolved, do not proceed with the remaining steps.

For assistance in the removal and replacement of a particular subassembly, see Removal and Replacement Procedures.

Click on a range for a list of possible error codes, descriptions of each error condition, and actions required to resolve the error condition.

101-199	Processor Test
200-218	Memory Test
301-304	Keyboard Test
400-498	Parallel Printer Test
501-516	Video Display Unit Test
600-699	Diskette Drive Test
802-824	Monochrome Video Test
1101-1109	Serial Test
1201-1210	Modem Communications Test
1700-1799	Hard Drive Test
2402-2480	Video Test
3206	Audio Test
3301-3305 66xx	CD DVD Drive Test
8601	Pointing Interface Device Test

Diagnostic Error Codes

Processor

Processor Test Error Codes

Error Code	Description	Recommended Action
101-xx	CPU test failed	Replace the system board and retest.
102-xx	Processor error	1. Run Computer Checkup or Setup and retest. 2. Replace the processor and retest.
103-xx	DMA controller failed	Replace the system board and retest.
104-xx	Interrupt controller failed	Replace the system board and retest.
105-xx	Port error	Replace the system board and retest.
106-xx	Keyboard controller self-test failed	Replace the system board and retest.
107-xx	CMOS RAM test failed	The following steps apply to error codes 107-xx through 109-xx:
108-xx	CMOS interrupt test failed	1. Replace the battery/clock module and retest.
109-xx	CMOS clock test failed	2. Replace the system board and retest.
110-xx	Programmable timer test failed	The following step applies to error codes 110-xx through 113-01:
111-xx	Refresh detect test failed	Replace the system board and retest.
112-xx	Speed test failed	
113-01	Protected mode test failed	
114-xx	Speaker test failed	1. Verify the speaker connection. 2. Replace the system board and retest.
199-xx	Installed devices test failed	1. Check system configuration. 2. Verify cable connections. 3. Check switch settings. 4. Run Compaq Utilities. 5. Replace the system board and retest.

Back to List

Diagnostic Error Codes

Memory

Memory Test Error Codes

Error Code	Description	Recommended Action
200-xx	Invalid memory configuration	1. Verify memory module value compatibility. 2. Reinsert memory in the correct location.
201-xx	Memory machine ID test failed	The following steps apply to error codes 201-xx and 202-xx:
202-xx	Memory system ROM checksum failed	1. Flash the ROM and retest. 2. Replace the memory and retest. 3. Replace the system board and retest.
203-xx	Memory write/read test failed	The following steps apply to error codes 203-xx through 210-xx:
204-xx	Memory address test failed	1. Remove one memory module at a time until the error message stops.
206-xx	Increment pattern test failed	2. Replace other removed modules one at a time, testing each to ensure the error does not return.
210-xx	Random pattern test failed	3. Replace the system board and retest.

Back to List

Diagnostic Error Codes

Keyboard

Keyboard Test Error Codes

Error Code	Description	Recommended Action
301-xx	Keyboard short test, 8042 self-test failed	The following steps apply to error codes 301-xx through 304-xx:
302-xx	Keyboard long test failed	1. Check the keyboard connection. If disconnected, turn the computer off and connect the keyboard.
303-xx	Keyboard LED test, 8042 self-test failed	2. Replace the keyboard and retest.
304-xx	Keyboard typematic test failed	3. Replace the system board and retest.

Back to List

Diagnostic Error Codes

Parallel Printer

Parallel Printer Test Error Codes

Error Code	Description	Recommended Action
401-xx	Printer failed or not connected	The following steps apply to error codes 401-xx through 498-xx: 1. Connect the printer.
402-xx	Printer data register failed	2. Check power to the printer.
403-xx	Printer pattern test failed	3. Install the loop-back connector and retest.
498-xx	Printer failed or not connected	4. Replace system board and retest.

Back to List

Diagnostic Error Codes

Video Display Unit Test

Video Display Unit Test Error Codes

Error Code	Description	Recommended Action
501-xx	Video controller test failed	The following step applies to error codes 501-xx through 516-xx:
502-xx	Video memory test failed	Replace the system board and retest.
503-xx	Video attribute test failed	
504-xx	Video character set test failed	
505-xx	Video 80 × 25 mode 9 × 14 character cell test failed	
506-xx	Video 80 × 25 mode 9 × 14 character cell test failed	
507-xx	Video 40 × 25 mode test failed	
508-xx	Video 320 × 200 mode color set 0 test failed	
509-xx	Video 320 × 200 mode color set 1 test failed	
510-xx	Video 640 × 200 mode test failed	
511-xx	Video screen memory page test failed	
512-xx	Video gray scale test failed	
514-xx	Video white screen test failed	
516-xx	Video noise pattern test failed	

Back to List

Diagnostic Error Codes

Diskette Drive

Diskette Drive Error Test Codes

Error Code	Description	Recommended Action
600-xx	Diskette ID drive types test failed	The following steps apply to error codes 600-xx through 698-xx:
601-xx	Diskette format failed	1. Replace the diskette and retest.
602-xx	Diskette read test failed	2. Check and/or replace the diskette power and signal cables and retest.
603-xx	Diskette write, read, compare test failed	3. Replace the diskette drive and retest.
604-xx	Diskette random seek test failed	4. Replace the system board and retest.
605-xx	Diskette ID media test failed	
606-xx	Diskette speed test failed	
607-xx	Diskette wrap test failed	
608-xx	Diskette write-protect test failed	
609-xx	Diskette reset controller test failed	
610-xx	Diskette change line test failed	
694-xx	Pin 34 is not cut on 360KB diskette drive	
697-xx	Diskette type error	
698-xx	Diskette drive speed not within limits	
699-xx	Diskette drive/media ID error	1. Replace media. 2. Run Setup.

Back to List

Diagnostic Error Codes

Monochrome Video

Monochrome Video Erro Test Codes

Error Code	Description	Recommended Action
802-xx	Video memory test failed	The following step applies to error codes 802-xx through 824-xx:
824-xx	Monochrome video text mode test failed	Replace the system board and retest.

Back to List

Diagnostic Error Codes

Serial

Serial Test Error Codes

Error Code	Description	Recommended Action
1101-xx	Serial Port Test	The following steps apply to error codes 1101-xx through 1109-xx:
1109-xx	Clock Register Test	1. Check the switch settings on the serial/parallel device, if applicable. 2. Replace the system board and retest.

Back to List

Diagnostic Error Codes

Modem

Modem Test Error Codes

Error Code	Description	Recommended Action
1201-xx	Modem Internal Loop-Back Test	The following steps apply to error codes 1201-xx through 1210-xx:
1202-xx	Modem Time-Out Error	1. Refer to modem documentation for correct Setup procedures.
1203-xx	Modem External Termination Test	2. Check the modem line.
1204-xx	Modem Auto Originate Test	3. Replace the modem and retest.
1206-xx	Dial Multifrequency Tone Test	
1210-xx	Modem Direct Connect Test	

Back to List

Diagnostic Error Codes

Hard Drive

Hard Drive Test Error Codes

Error Code	Description	Recommended Action
1700-xx	Hard drive ID types test failed	The following steps apply to error codes 1700-xx through 1799-xx:
1701-xx	Hard drive format test failed	1. Run Setup and verify drive type.
1702-xx	Hard drive read test failed	2. Replace the hard drive signal and power cables and retest.
1703-xx	Hard drive write/read/compare test failed	3. Replace the hard drive and retest.
1704-xx	Hard drive random seek test failed	4. Replace the system board and retest.
1705-xx	Hard drive controller test failed	
1706-xx	Hard drive ready test failed	
1707-xx	Hard drive recalibration test failed	
1708-xx	Hard drive format bad track test failed	
1709-xx	Hard drive reset controller test failed	
1710-xx	Hard drive park head test failed	
1714-xx	Hard drive file write test failed	
1715-xx	Hard drive head select test failed	
1716-xx	Hard drive conditional format test failed	
1717-xx	Hard drive ECC* test failed	
1719-xx	Hard drive power mode test failed	
1730-x	Fixed Disk 0 does not support DMA Mode	
1731-x	Fixed Disk 1 does not support DMA Mode	
1740-x	Fixed Disk 0 failed Set Block Mode command	
1741-x	Fixed Disk 1 failed Set Block Mode command	
1750-x	Fixed Disk 0 failed Identify command	
1751-x	Fixed Disk 1 failed Identify command	
1760-x	Fixed Disk 0 does not support Block Mode	
1761-x	Fixed Disk 1 does not support Block Mode	
1790-x	Disk 0 Configuration Error	
1792-x	Secondary Disk Controller Failure	
1799-xx	Invalid hard drive type failed	

Back to List

Diagnostic Error Codes

DVD Drive

DVD Drive Error Test Cods

Error Code	Description	Recommended Action
3301-xx 3305-xx 66XX-xx	DVD drive read test failed	The following steps apply to error codes 3301-xx through 3305-xx and 66XX-xx: 1. Replace the DVD drive and retest.* 2. Check the jumper settings on the DVD drive. 3. Check and/or replace the power and signal cables and retest. 4. Ensure no DVD disk is inserted when running the CD Drive tests. This will result in a 66xx error. This is a test issue, not a CD drive issue .

* Boot to DOS (Command Prompt only) or Windows **(Not Safe Mode)**. Press the DVD drive eject button (located on the front bezel) to eject the CD and retest.

Back to List

Diagnostic Error Codes

Video Test

Video Test Error Codes

Error Code	Description	Recommended Action
2402-xx	Video memory test failed	The following steps apply to error codes 2402-xx through 2456-xx:
2403-xx	Video attribute test failed	1. Run Setup.
2404-xx	Video character set test failed	2. Replace the system board and retest.
2405-xx	Video 80 × 25 mode 9 × 14 character cell test failed	
2406-xx	Video 80 × 25 mode 8 × 8 character cell test failed	
2407-xx	Video 40 × 25 mode test failed	
2408-xx	Video 320 × 200 mode color set 0 test failed	
2409-xx	Video 320 × 200 mode color set 1 test failed	
2410-xx	Video 640 × 200 mode test failed	
2411-xx	Video screen memory page test failed	
2412-xx	Video gray scale test failed	
2414-xx	Video white screen test failed	
2416-xx	Video noise pattern test failed	The following steps apply to error codes 2402-xx through 2456-xx:
2418-xx	ECG/VGC memory test failed	1. Run Setup.
2419-xx	ECG/VGC ROM checksum test failed	2. Replace the system board and retest.
2420-xx	ECG/VGC attribute test failed	
2421-xx	ECG/VGC 640 × 200 graphics mode test failed	
2422-xx	ECG/VGC 640 × 350 16-color set test failed	
2423-xx	ECG/VGC 640 × 350 64-color set test failed	
2424-xx	ECG/VGC monochrome text mode test failed	
2425-xx	640 × 480 graphics test failure	
2431-xx	640 × 480 graphics test failure	
2432-xx	320 × 200 graphics (256-color mode) test failed	
2448-xx	Advanced VGA Controller test failed	
2451-xx	132-column Advance VGA test failed	
2456-xx	Advanced VGA 256-Color test failed	
2468-xx	Advanced VGA BitBLT test	The following steps apply to error codes 2468-xx through 2480-xx:
2477-xx	Advanced VGA datapath test	1. Run Setup.
2478-xx	Advanced VGA BitBLT test	2. Replace the system board and retest.
2480-xx	Advanced VGA Linedraw test	

Back to List

Diagnostic Error Codes

Pointing Device

Pointing Device Test Error Codes

Error Code	Description	Recommended Action
8601-xx	Pointing Device Interface test failed	1. Replace with a working pointing device and retest. 2. Replace the system board and retest.

Back to List

Diagnostic Error Codes

Audio

Audio Test Error Codes

Error Code	Description	Recommended Action
3206-xx	Audio System Internal Error	Replace the system board and retest.

Back to List

Diagnostic Error Codes

CD Drive

CD Drive Test Error Codes

Error Code	Description	Recommended Action
3301-xx 3305-xx 66XX-xx	CD drive read test failed	The following steps apply to error codes 3301-xx through 3305-xx and 66XX-xx: 1. Replace the CD and retest. 2. Check the jumper settings on the CD drive. 3. Check and/or replace the power and signal cables and retest. 4. Replace the CD drive and retest.

Back to List

Removal and Replacement Procedures

Disassembly Sequence

Preparation for Disassembly

Hood

Air Baffle

Drive Cage

Mass Storage

Front Bezel

Speakers

Button Board & Cable

Headphone Board

Power Supply

Processor AMD or Pentium II

Modem

NIC

Memory

RTC Battery

Serial Cable

System Board

This section provides necessary information for servicing the Compaq Presario 2250, 2510, 2410 ES and 4240 ES Series of Personal Computers. Adherence to the procedures and precautions described in this section is essential for proper service.

When requesting information or ordering spare parts, the computer serial number should be provided to Compaq. The serial number can be found on the right side of the computer's hood 1.

Electrostatic Discharge

ESD
Service
Cable Positions
Preparation for Disassembly

A sudden discharge of static electricity from a finger or other conductor can destroy static-sensitive devices or microcircuitry. Often the spark is neither felt nor heard, but damage occurs. An electronic device exposed to electrostatic discharge (ESD) may not be affected at all and will work perfectly throughout a normal cycle. Or it may function normally for a while, then degrade in the internal layers, reducing its life expectancy.

Networks built into many integrated circuits provide some protection, but in many cases, the discharge contains enough power to alter device parameters or melt silicon junctions.

Click on the topics below for additional ESD information.

Generating Static
Grounding Methods
Recommended Materials
Preventing Electrostatic Damage to Equipment
Grounding Workstations
Grounding Equipment
Preventing Damage to Drives

Generating Static

The following table shows how different activities generate static electricity and and at different electrostaic voltage levels.

Typical Electrostatic Voltages			
	Relative Humidity		
Event	**10%**	**40%**	**55%**
Walking across carpet	35,000 V	15,000 V	7,500 V
Walking across vinyl floor	12,000 V	5,000 V	3,000 V
Motions of bench worker	6,000 V	800 V	400 V
Removing DIPS from plastic tubes	2,000 V	700 V	400 V
Removing DIPS from vinyl trays	11,500 V	4,000 V	2,000 V
Removing DIPS from Styrofoam	14,500 V	5,000 V	3,500 V
Removing bubble pack from PCBs	26,000 V	20,000 V	7,000 V
Packing PCBs in foam-lined box	21,000 V	11,000 V	5,000 V
NOTE: 700 volts can degrade a product.			

Back to List

Preventing Electrostatic Damage to Equipment

Many electronic components are sensitive to ESD. Circuitry design and structure determine the degree of sensitivity. The following proper packaging and grounding precautions are necessary to prevent damage:

- Protect all electrostatic parts and assemblies with conductive or approved containers or packaging.
- Keep electrostatic sensitive parts in their containers until they arrive at static-free stations.
- Place items on a grounded surface before removing them from their container.
- Always be properly grounded when touching a sensitive component or assembly.
- Place reusable electronic-sensitive parts from assemblies in protective packaging or conductive foam.

Use transporters and conveyors made of antistatic belts and metal roller bushings. Mechanized equipment used for moving materials must be wired to be grounded, and proper materials must be selected to avoid static charging. When grounding is not possible, use an ionizer to dissipate electric charges.

Back to List

Preventing Damage to Drives

To prevent damage to hard drives, use the following precautions:

- Handle drives gently, using static-guarding techniques.
- Store drives in the original shipping containers.
- Avoid dropping drives from any height onto any surface.
- Handle drives on surfaces that have at least one inch of shockproof foam.
- Always place drives PCB assembly side down on the foam.

Back to List

Grounding Methods

The method for grounding must include a wrist strap or a foot strap at a grounded workstation. When seated, wear a wrist strap connected to a grounded system. When standing, use footstraps and a grounded floor mat.

Static-Shielding Protection Levels	
Method	**Voltages**
Antistatic Plastic	1,500
Carbon-Loaded Plastic	7,500
Metallized Laminate	15,000

Back to List

Grounding Workstations

To prevent static damage at the workstation, use the following precautions:

- Cover the workstation with approved static-dissipative material. Provide a wrist strap connected to the work surface and properly grounded tools and equipment.
- Use static-dissipative mats, heel straps, or air ionizers to give added protection.
- Handle electrostatic-sensitive components, parts, and assemblies by the case or PCB laminate. Handle them only at static-free workstations.
- Avoid contact with pins, leads, or circuitry.
- Turn off power and input signals before inserting and removing connectors or test equipment.
- Use fixtures made of static-safe materials when fixtures must directly contact dissipative surfaces.
- Keep work area free of nonconductive materials such as ordinary plastic assembly aids and Styrofoam.
- Use field service tools, such as cutters, screwdrivers, and vacuums, that are conductive.
- Use a portable field service kit with a static dissipative vinyl pouch that folds out of a work mat. Also use a wrist strap and a ground cord for the work surface. Ground the cord to the chassis of the equipment undergoing test or repair.

Back to List

Grounding Equipment

Use the following equipment to prevent static electricity damage to the unit:

Wrist Straps are flexible straps with a minimum of 1 megohm +/- 10% resistance to the ground cords. To provide proper ground, a strap must be worn snug against the skin. On grounded mats without banana-plug connectors, connect a wrist strap with alligator clips.

Heelstraps/Toestraps/Bootstraps can be used at standing workstations and are compatible with most types of boots and shoes. On conductive floors or dissipative floor mats, use them on both feet with a minimum of 1 megohm resistance between operator and ground. To be effective, the conductive strips must be worn in contact with the skin.

Back to List

Recommended Materials and Equipment

Other materials and equipment that are recommended for use in preventing static electricity include:

- Antistatic tape
- Antistatic smocks, aprons, or sleeve protectors
- Conductive bins, and other assembly or soldering aids
- Conductive foam
- Conductive tabletop workstations with ground cord of 1 megohm of resistance
- Static dissipative table or floor mats with hard tie to ground
- Field service kits
- Static awareness labels
- Wrist straps and footwear straps providing 1 megohm +/- 10% resistance
- Material handling packages
- Conductive plastic bags
- Conductive plastic tubes
- Conductive tote boxes
- Metal tote boxes
- Opaque shielding bags
- Transparent metallized shielding bags
- Transparent shielding tubes

Back to List

Service Considerations

ESD

Service

Cable Positions

Preparing for Disassembly

Listed below are some of the considerations that should be kept in mind during the disassembly and assembly of the computer.

Tool Requirements

- Torx T-8, T-10, and T-15 screwdrivers (included in kit number 130619-001)
- Needle-nose pliers
- Phillips screwdriver (An 8-inch Phillips screwdriver may be necessary for some procedures.)
- Flat-bladed screwdriver
- Diagnostics software
- ROM removal tool

Screws

The screws used in these products are not interchangeable. If an incorrect screw is used during the reassembly process, it could cause damage to the unit. Compaq strongly recommends that all screws removed during the disassembly process be kept with the part that was removed, then returned to their proper locations.

IMPORTANT: As each subassembly is removed from the computer, it should be placed away from the work area to prevent damage.

Cables and Connectors

ESD

Service

Cable Positions

Preparing for Disassembly

Most cables used throughout the unit are ribbon cables. These cables must be handled with extreme care to avoid damage. Apply only the tension required to seat or unseat the cables during insertion or removal from the connector. Handle cables by the connector whenever possible. In all cases, avoid bending, twisting, or tearing the cables, and ensure that cables are placed in such a way that they cannot be caught or snagged by parts being removed or replaced. The numbered cables show the recommended configuration for the ribbon cables. The shaded lines indicate alternative configurations for additional optional hard drives, cd/dvd drives, and diskette drives.

CAUTION: When servicing these computers, ensure that cables are placed in their proper location during the reassembly process. Improper cable placement can cause severe damage to the unit.

Click on a topic below to review ribbon cable routing.

Models: 2250 Series, 2510, 2410 ES	**Model: 4240 ES**
Diskette Drive Cable Installation	Diskette Drive Cable Installation
Hard Drive/CD Drive Cable Installation	Hard Drive/DVD Drive Cable Installation

2253, 2254, 2255, 2510, 2410 ES Models Diskette Drive Cable Installation

Position the ribbon cable for the diskette drive as shown below.

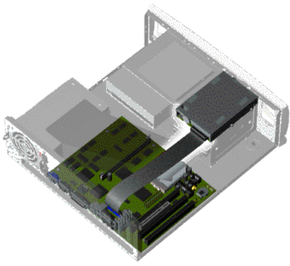

2253, 2254, 2255, 2510, 2410 ES Models Diskette Drive Cable Installation

Back to top

2253, 2254, 2255, 2510, 2410 ES Models Hard Drive/CD Drive Cable Installation

Position the ribbon cable for the hard drive and CD Drive as shown below.

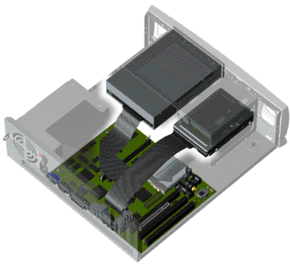

2253, 2254, 2255, 2510, 2410 ES Models Hard Drive/CD Drive Cable Installation

Back to top

4240 ES Models Diskette Drive Data Cable Installation

Position the ribbon cable for the diskette drive as shown below.

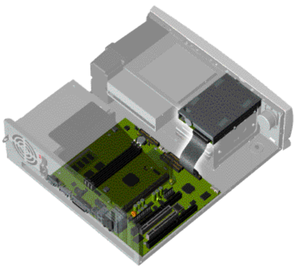

4240 ES Models Diskette Drive Data Cable Installation

Back to top

4240 ES Models Hard Drive and DVD/Drive Cable Installation

Position the ribbon cable for the hard drive and DVD drive as shown below.

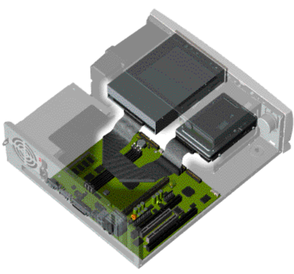

4240 ES Models Hard Drive and DVD/Drive Cable Installation

Back to top

Removal and Replacement

Lifting the Air Baffle

Disassembly Sequence

Hood

Air Baffle

Drive Cage

Mass Storage

Front Bezel

Speakers

Button Board & Cable

Headphone Board

Power Supply

Processor AMD Pentium II

Modem

NIC

Memory

RTC Battery

Serial Cable

System Board

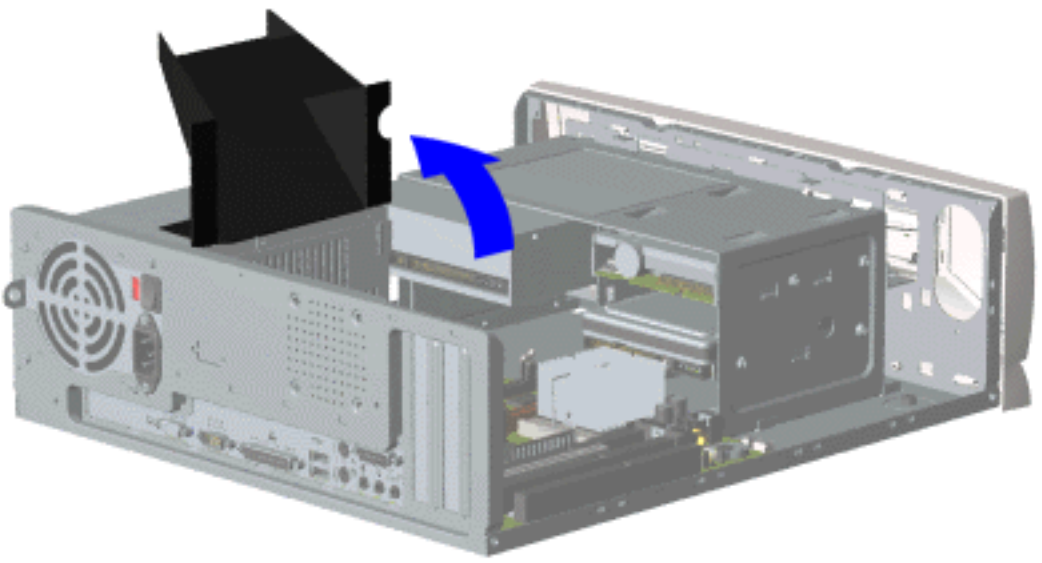

Compaq Presario Series Personal Computers use an air baffle to control the temperature within the unit. To access many of the components within the system move the air baffle out of the way.

1. Perform the preparation procedures.
2. Remove the hood.
3. Disconnect the data, power, and audio cables from the diskette, hard, and CD (or DVD) drives.
4. Lift the baffle and fold it back so that it rests on the side of the unit.

For the procedure to remove the air baffle, click here.

Removal and Replacement

Removing the Air Baffle

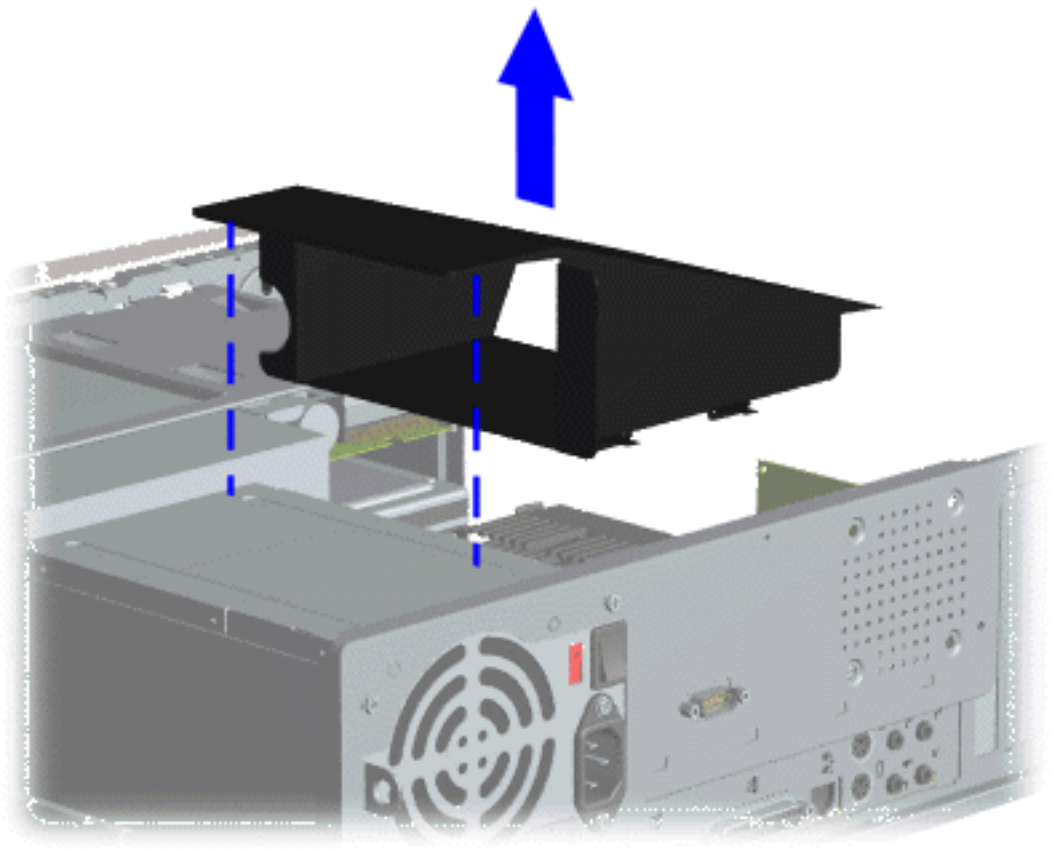

Compaq Presario Series Personal Computers use an air baffle to control the temperature within the unit. To access many of the components within the system, simply move the air baffle out of the way.

CAUTION: Do not operate the computer without the air baffle. Damage may occur to the computer if the plastic air baffle is not in place.

NOTE: The adhesive material that holds the air baffle in place can only be used once. Do not attempt to re-use the air baffle that was originally installed in the unit.

1. Perform the preparation procedures.
2. Remove the hood.
3. Disconnect the data, power, and audio cables from the diskette, hard, and CD (or DVD) drives.
4. Grasp the air baffle firmly with both hands and peel it off of the power supply.

End of sequence. To replace the air baffle, reverse this procedure.

Return to Removal and Replacement.

Removal and Replacement

Removing the Drive Cage

Disassembly Sequence

Hood
Air Baffle
Drive Cage
Mass Storage
Front Bezel
Speakers
Button Board & Cable
Headphone Board
Power Supply
Processor AMD Pentium II
Modem
NIC
Memory
RTC Battery
Serial Cable
System Board

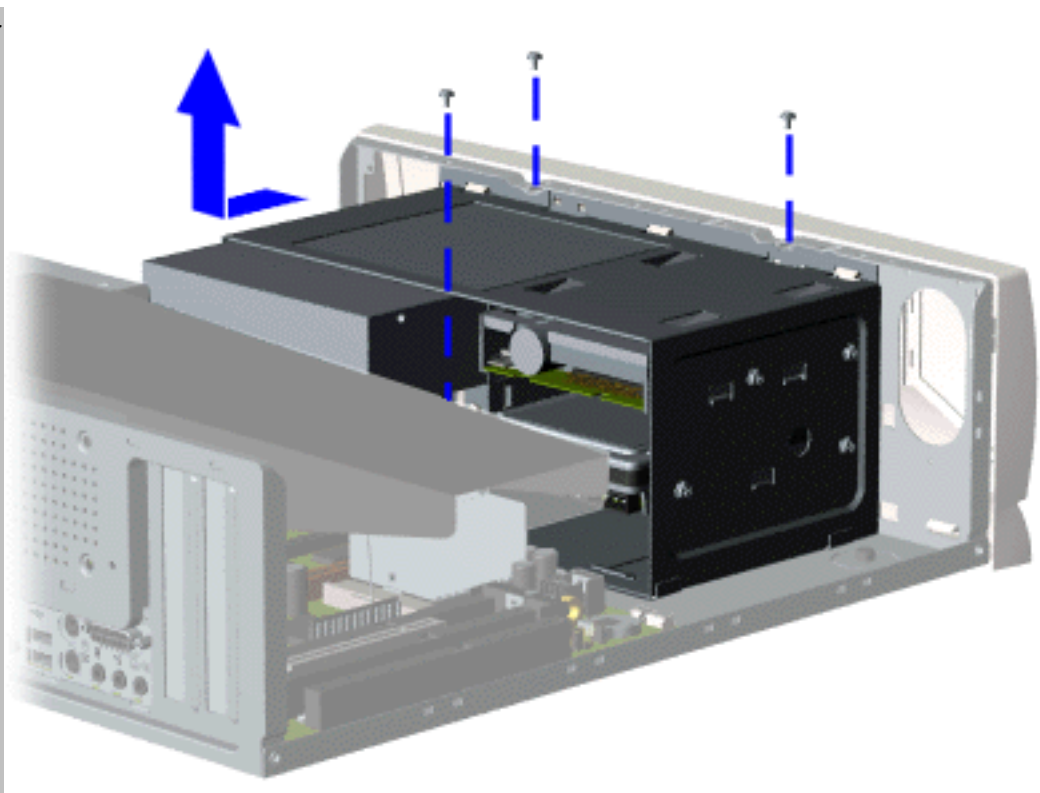

All the mass storage devices are secured in a drive cage within the chassis. You will need to remove the drive cage to remove or replace any of the mass storage devices in the computer. To remove the drive cage, complete the following steps:

1. Perform the preparation procedures.
2. Remove the hood.
3. Move the air baffle out of the way.
4. Disconnect the diskette, cd/dvd, and hard drive cables.
5. Remove the three screws from the drive cage, slide the drive cage back, and lift it up out of the chassis

End of sequence. To replace the drive cage, reverse this procedure.

Removal and Replacement

Mass Storage

Disassembly Sequence

Hood

Air Baffle

Drive Cage

Mass Storage

Front Bezel

Speakers

Button Board & Cable

Headphone Board

Power Supply

Processor AMD Pentium II

Modem

NIC

Memory

RTC Battery

Serial Cable

System Board

All the mass storage devices are secured in a drive cage within the chassis. You will need to remove the drive cage to remove or replace the diskette drive (1), CD/DVD Drive (2) or the hard drive (3 and 4.)

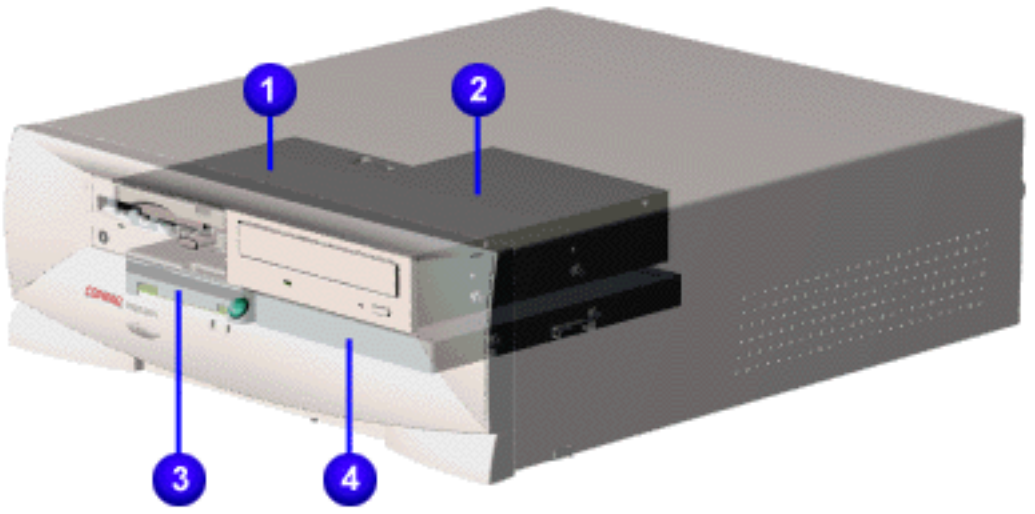

Removal and Replacement

Removing the Diskette Drive

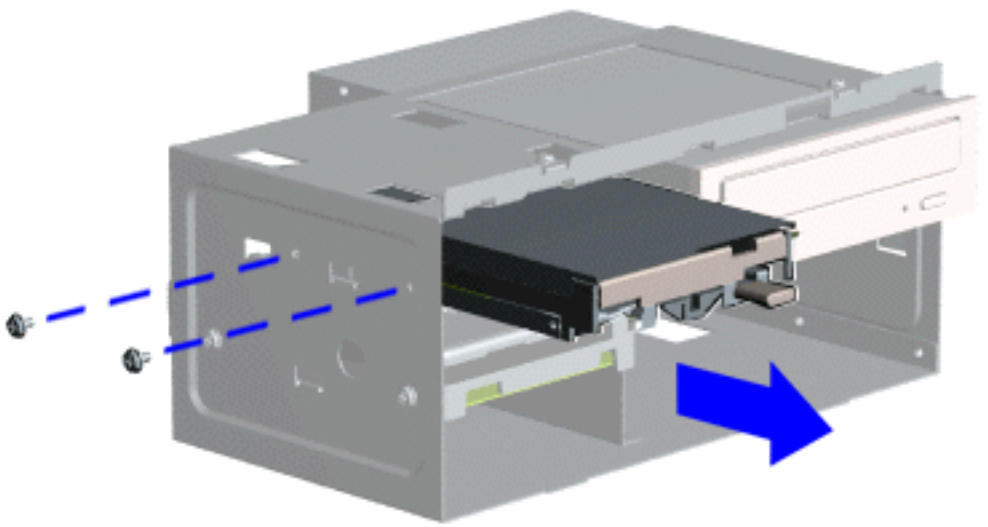

1. Perform the preparation procedures.
2. Remove the hood.
3. Move the air baffle out of the way.
4. Disconnect the power and data cables.
5. Remove the drive cage from the chassis.
6. Remove the two screws on the side of the drive cage, and slide the diskette drive out through the front of the drive cage.

End of sequence. To replace the diskette drive, reverse this procedure.

Return to Removing Mass Storage.

Removal and Replacement

Removing the CD or DVD Drive

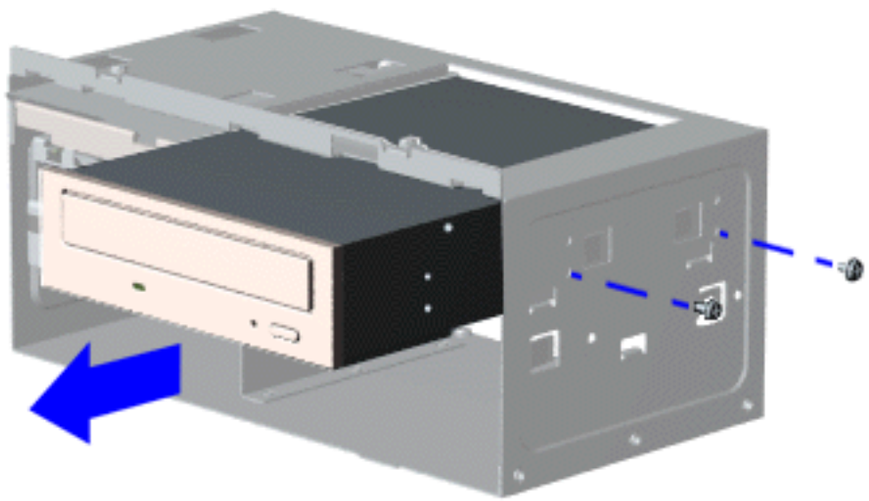

1. Perform the preparation procedures.
2. Remove the hood.
3. Move the air baffle out of the way.
4. Disconnect the power, signal, and audio cables.
5. Remove the drive cage from the chassis.
6. Remove the two screws on the side of the drive cage, and slide the CD or DVD drive out of the front of the drive cage.

End of sequence. To replace the CD or DVD Drive, reverse this procedure.

Return to Removing Mass Storage.

NOTE: The DVD Drive is standard on the 4240 ES Model only.

Removal and Replacement

Removing the Hard Drive

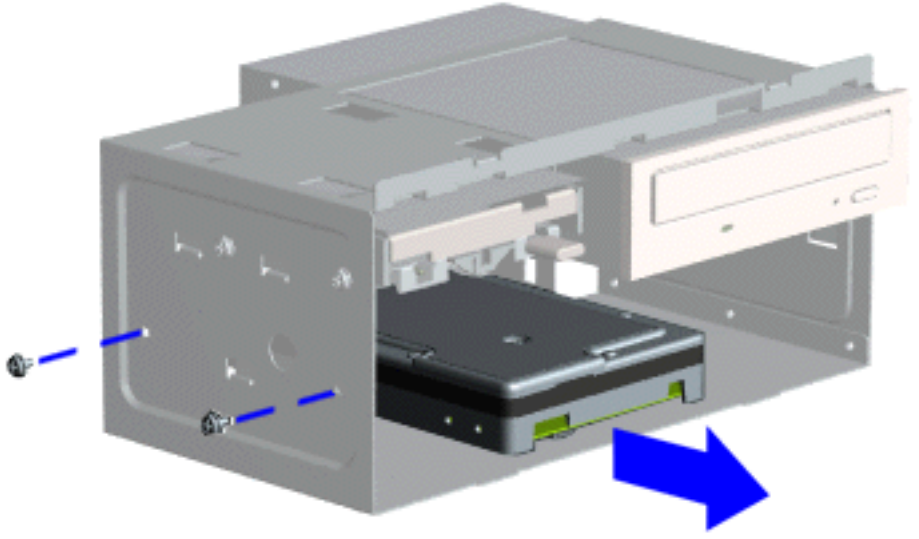

Removing the Hard Drive

1. Perform the preparation procedures.
2. Remove the hood.
3. Move the air baffle out of the way.
4. Disconnect the power and signal cables.
5. Remove the drive cage from the chassis.
6. Remove the two screws on the side of the drive cage, and slide the hard drive out of the front of the drive cage.

End of sequence. To replace the hard drive, reverse this procedure.

Return to Removing Mass Storage.

Removal and Replacement

Removing the Front Bezel

Disassembly Sequence

Hood

Air Baffle

Drive Cage

Mass Storage

Front Bezel

Speakers

Button Board & Cable

Headphone Board

Power Supply

Processor AMD Pentium II

Modem

NIC

Memory

RTC Battery

Serial Cable

System Board

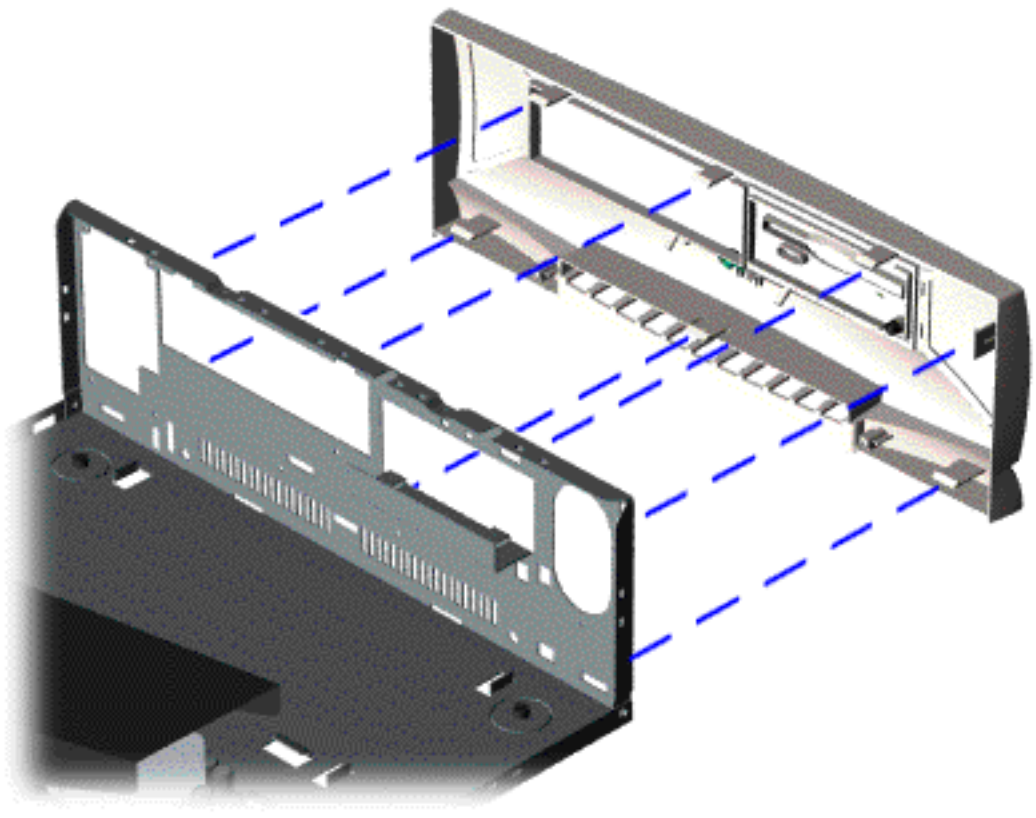

1. Perform the preparation procedures.
2. Remove the hood.
3. Move the air baffle out of the way.
4. Remove the drive cage from the chassis.
5. Release the seven latches that secure the bezel to the front of the chassis.
6. Remove the front bezel from the chassis.

End of sequence. To replace the front bezel, reverse this procedure.

NOTE: The front bezel of your model may appear differently from the one pictured. Presario 2410 ES and 4240 ES models contain enclosures for speakers.

Removal and Replacement

Removing the Speakers

Disassembly Sequence

Hood

Air Baffle

Drive Cage

Mass Storage

Front Bezel

Speakers

Button Board & Cable

Headphone Board

Power Supply

Processor AMD Pentium II

Modem

NIC

Memory

RTC Battery

Serial Cable

System Board

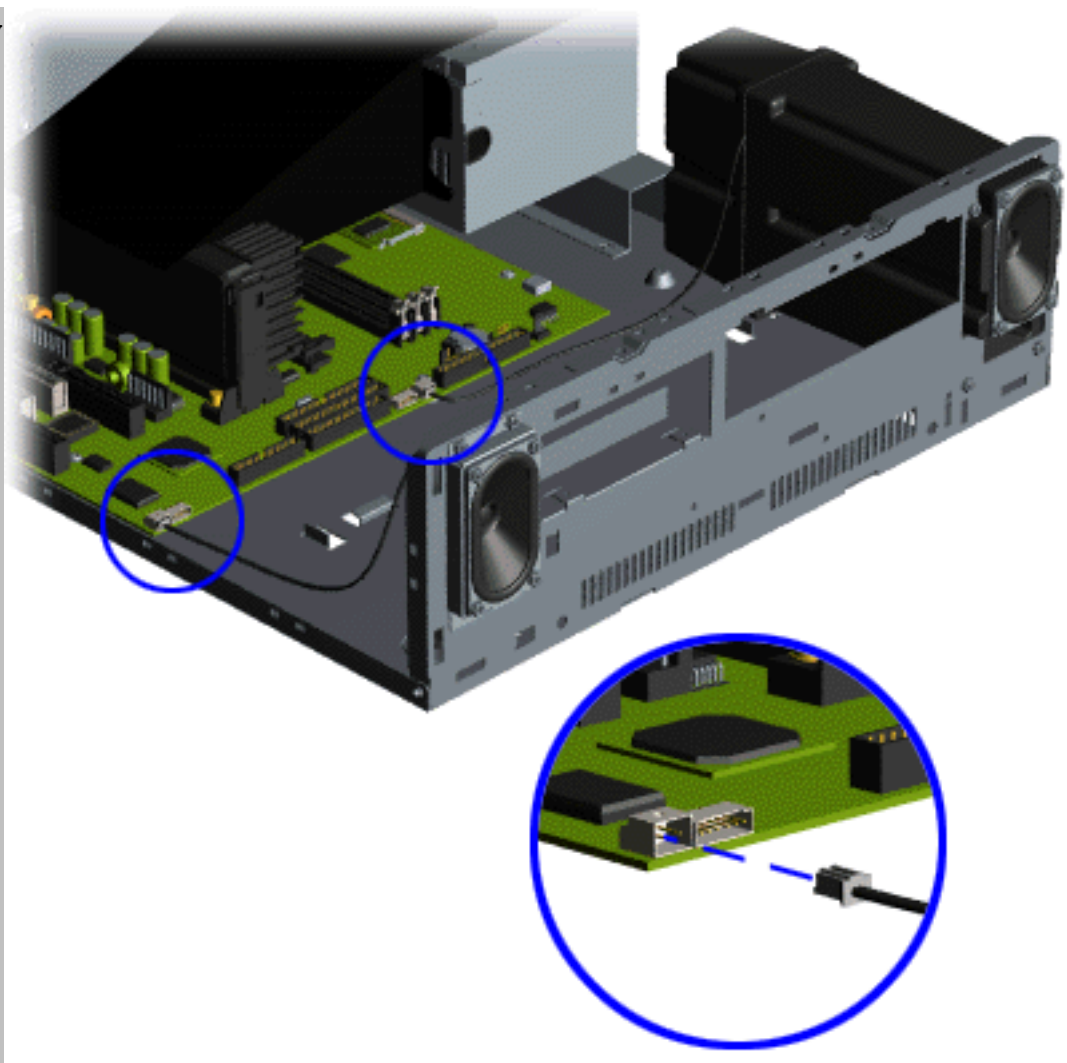

Disconnecting the Speaker Cables from the System Board

NOTE: Speakers are only available on the Presario 2410 ES and 4240 ES Models.

1. Perform the preparation procedures.
2. Remove the hood.
3. Move the air baffle out of the way.
4. Remove the drive cage from the chassis.
5. Remove the front bezel.
6. Disconnect the speaker cables from the system board.

Next step.

Removal and Replacement

Removing the Right Speaker

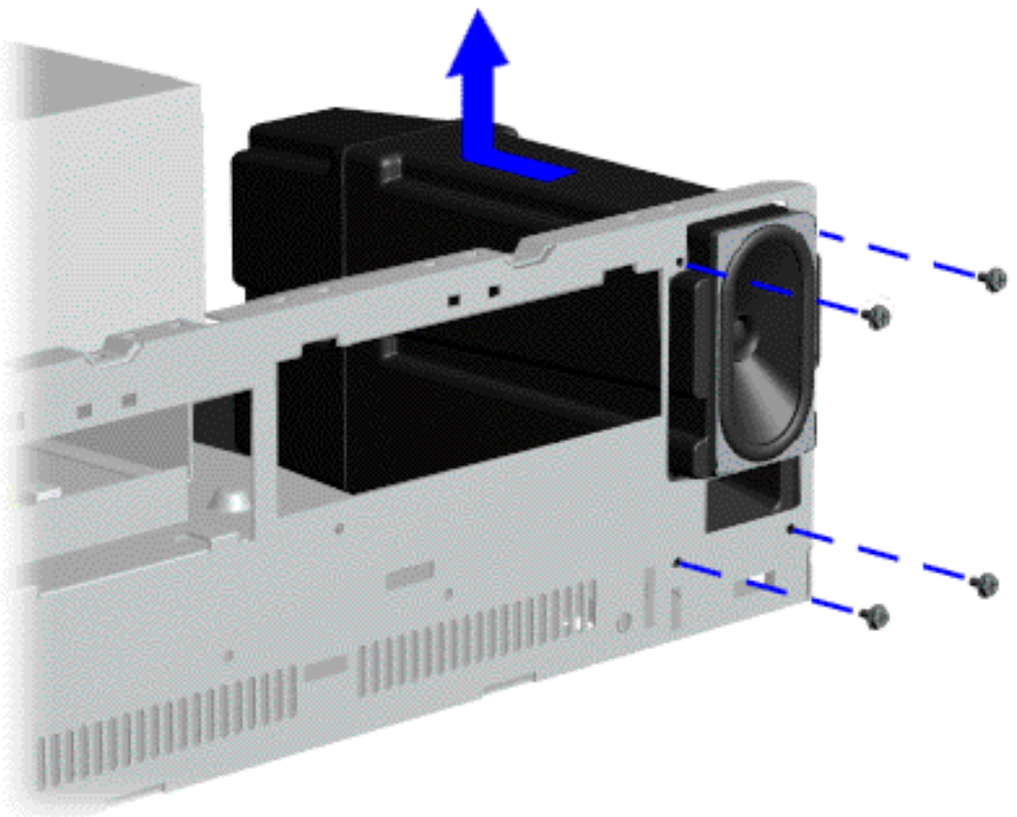

Removing the Right Speaker

1. Perform the preparation procedures.
2. Remove the hood.
3. Move the air baffle out of the way.
4. Remove the drive cage from the chassis.
5. Remove the front bezel.
6. Disconnect the speaker cables from the system board.
7. Remove the four screws from the rear of the right speaker and separate the speaker from the chassis.

NOTE: Right speaker and enclosure are one assembly.

Next step

Removal and Replacement

Removing the Left Speaker

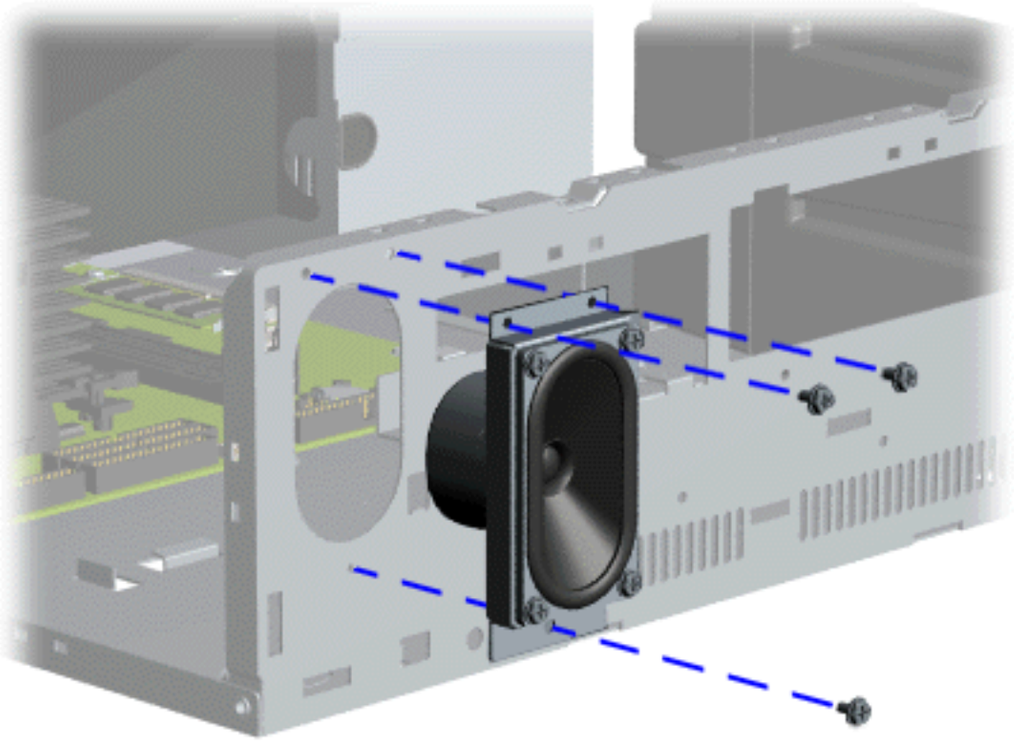

Removing the Left Speaker

1. Perform the preparation procedures.
2. Remove the hood.
3. Move the air baffle out of the way.
4. Remove the drive cage from the chassis.
5. Remove the front bezel.
6. Disconnect the speaker cables from the system board.
7. Remove the four screws from the rear of the right speaker and separate the speaker from the chassis.
8. Remove the three screws from the left speaker and separate the speaker from the chassis.

End of sequence. To replace the speakers, reverse this procedure.

Removal and Replacement

Button Board and Cable Assembly

Disassembly Sequence

Hood

Air Baffle

Drive Cage

Mass Storage

Front Bezel

Speakers

Button Board & Cable

Headphone Board

Power Supply

Processor AMD Pentium II

Modem

NIC

Memory

RTC Battery

Serial Cable

System Board

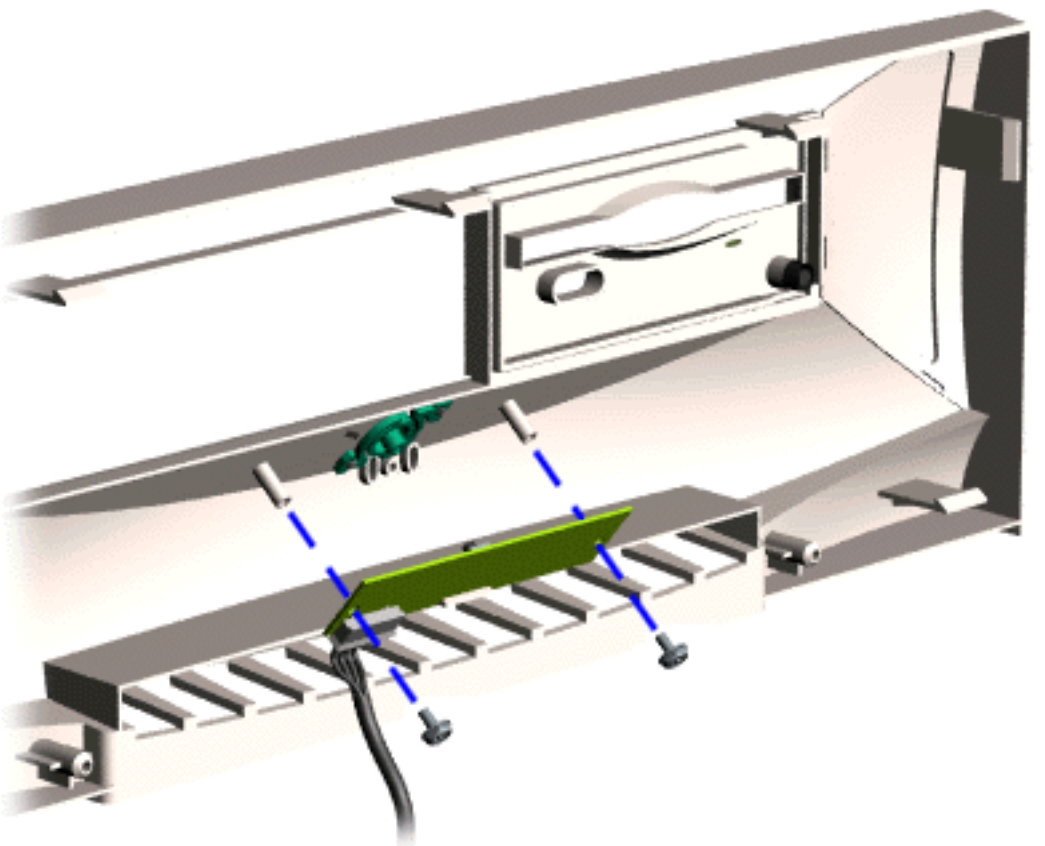

Removing the Button Board & Cable Assembly

1. Perform the preparation procedures.
2. Remove the hood.
3. Move the air baffle out of the way.
4. Remove the drive cage from the chassis.
5. Remove the front bezel from the chassis.
6. Disconnect the button board cable from the system board, and thread the cable out through the front of the chassis.
7. Remove the two screws that hold the button board onto the front bezel.

End of sequence. To replace the button board, reverse this procedure.

Removal and Replacement

Removing the Headphone Board

Disassembly Sequence

Hood
Air Baffle
Drive Cage
Mass Storage
Front Bezel
Speakers
Button Board & Cable
Headphone Board
Power Supply
Processor AMD Pentium II
Modem
NIC
Memory
RTC Battery
Serial Cable
System Board

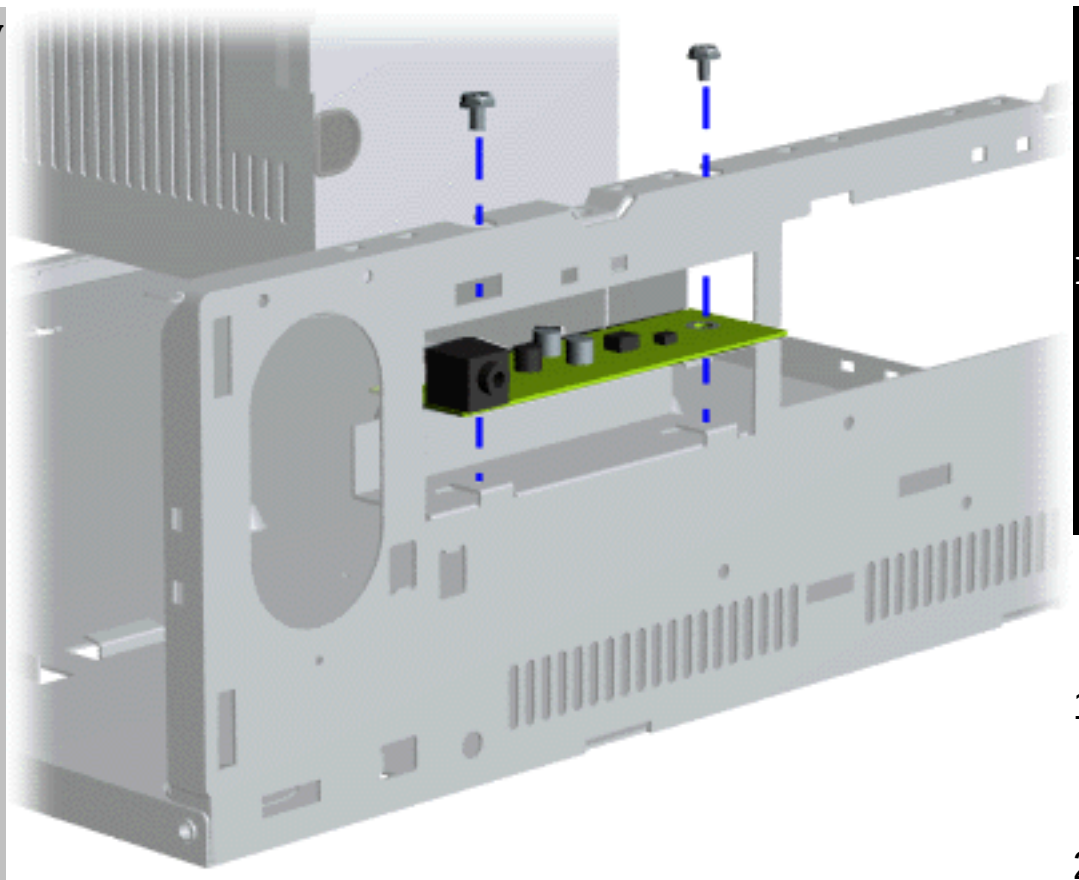

Removing the Headphone Board

NOTE: The headphone board is only available on Presario 2410 ES and 4240 ES models.

1. Perform the preparation procedures.
2. Remove the hood.
3. Move the air baffle out of the way.
4. Remove the drive cage from the chassis.
5. Disconnect the headphone board from the system board.
6. Remove the two screws that hold the headphone board onto the chassis, and lift the headphone board off othe front of the chassis.

End of sequence. To replace the headphone board, reverse this procedure.

Removal and Replacement

Removing the Power Supply

Disassembly Sequence

Hood
Air Baffle
Drive Cage
Mass Storage
Front Bezel
Speakers
Button Board & Cable
Headphone Board
Power Supply
Processor AMD Pentium II
Modem
NIC
Memory
RTC Battery
Serial Cable
System Board

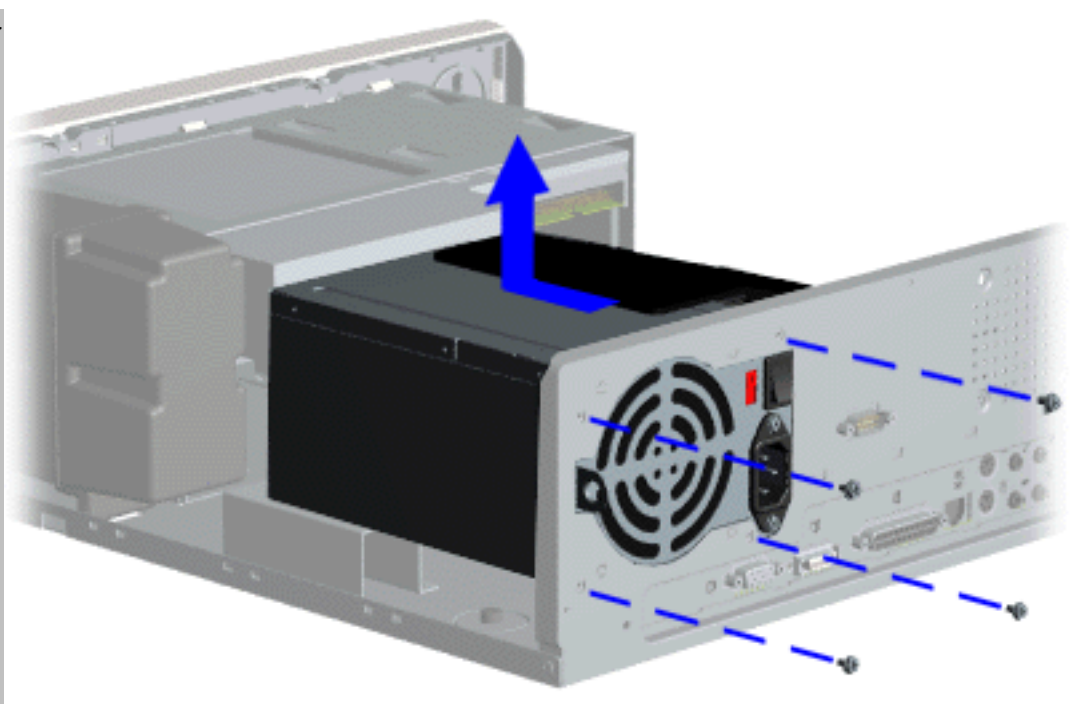

Removing the Power Supply

1. Perform the preparation procedures.
2. Remove the hood.
3. Move the air baffle out of the way.
4. Disconnect the power cables from the diskette drive, hard drive, and CD/DVD drive cables.
5. Disconnect the power supply cable from the system board.
6. Remove the four screws that hold the power supply onto the rear wall of the chassis.
7. Slide the power supply back and lift it out of the chassis.

NOTE: The adhesive material that holds the air baffle in place can only be used once. Do not attempt to remove or reuse te air baffle that was originally installed in the unit.

End of sequence. To replace the power supply, reverse this procedure.

Removal and Replacement

Removing the Processor

Disassembly Sequence

Hood
Air Baffle
Drive Cage
Mass Storage
Front Bezel
Speakers
Button Board & Cable
Headphone Board
Power Supply
Processor AMD Pentium II
Modem
NIC
Memory
RTC Battery
Serial Cable
System Board

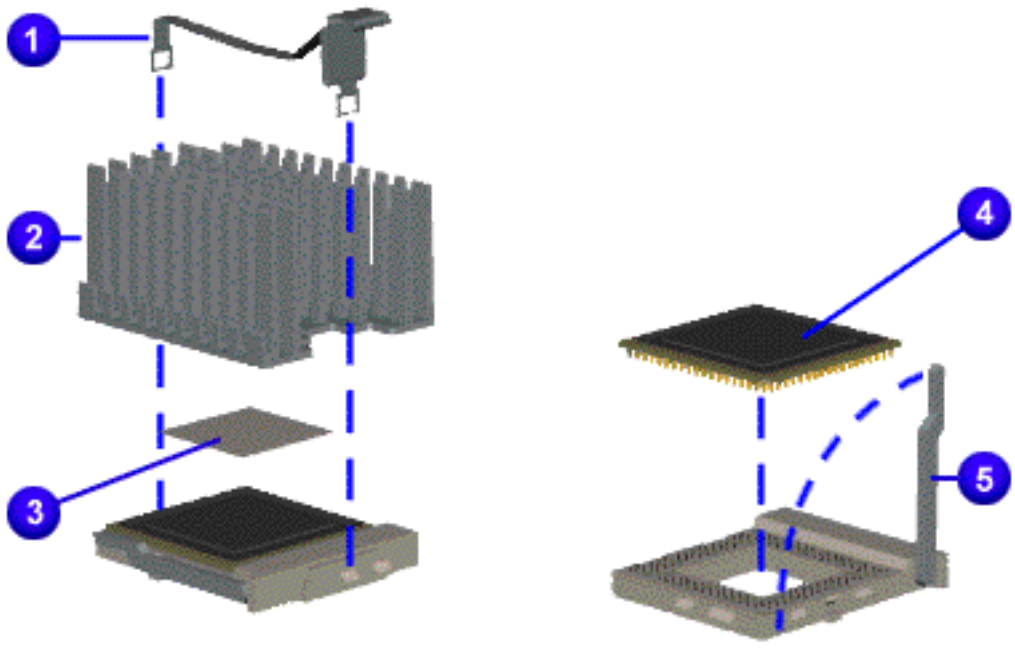

1. Perform the preparation procedures.
2. Remove the hood.
3. Move the air baffle out of the way.
4. Remove the system board from the chassis.
5. Locate the Zero Insertion Force (ZIF) socket.
6. Remove the clip from the heatsink 1 of the processor and remove the heatsink 2
7. Remove the heat conductive pad off the processor 3.
8. Lift up the handle of the ZIF socket 5 and pull the processor off of the system board 5.

NOTE: The processor is spared with the heatsink.

End of sequence. To replace the processor, reverse this procedure.

Removal and Replacement

Removing the Pentium II Processor

Disassembly Sequence

Hood
Air Baffle
Drive Cage
Mass Storage
Front Bezel
Speakers
Button Board & Cable
Headphone Board
Power Supply
Processor AMD Pentium II
Modem
NIC
Memory
RTC Battery
Serial Cable
System Board

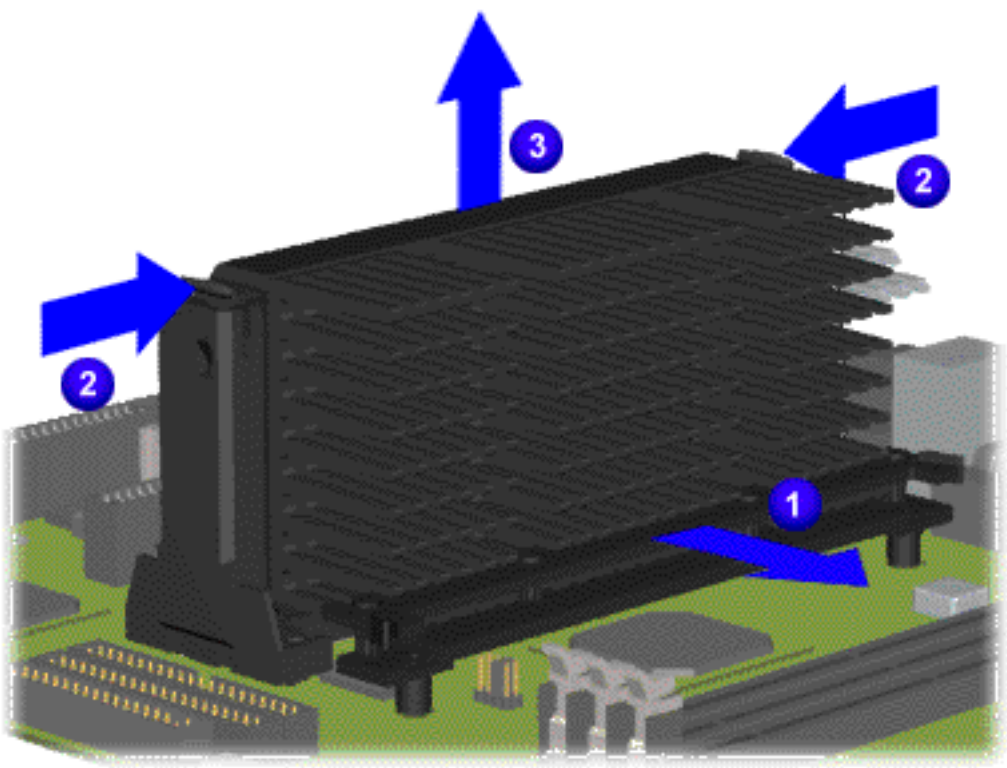

CAUTION: Before installing a new processor, Jumper and Switch Information to reset the jumpers for the processor. If the processor is installed with the incorrect jumper settings, the processor and system board may be damaged.

1. Perform the preparation procedures.
2. Remove the hood.
3. Move the air baffle out of the way.
4. Remove the system board.
5. Locate the Pentium II processor.
6. Open the top lever of the clip to release the heat sink 1.
7. Push in the release tabs on the ends of the processor "goal posts" 2.
8. Unplug the processor from the system board and slide out from the "goal posts" 3.

End of sequence. To replace the Pentium II processor, reverse this procedure.

Click here for the procedure to remove the goal posts.

NOTE: The Pentium II processor is spared with a heatsink.

IMPORTANT: Ensure that the processor is properly aligned in the "goal posts" before plugging it into the system board.

Removal and Replacement

Removing the "Goal Posts"

Hood
Air Baffle
Drive Cage
Mass Storage
Front Bezel
Speakers
Button Board & Cable
Headphone Board
Power Supply
Processor AMD or Pentium II
Modem
NIC
Memory
RTC Battery
Serial Cable
System Board

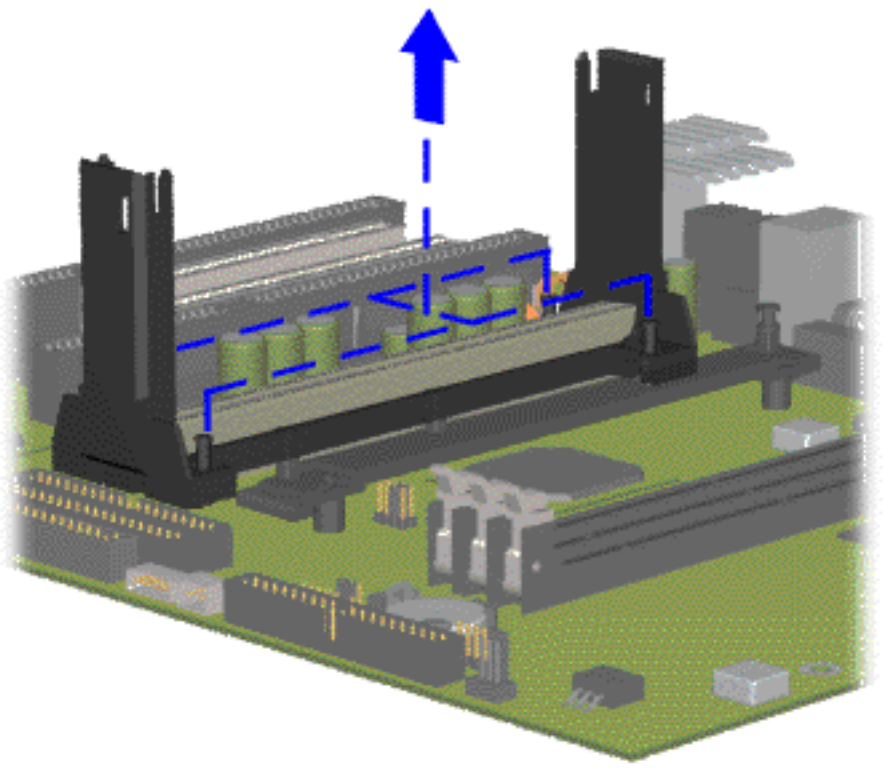

1. Perform the preparation procedures.
2. Remove the hood.
3. Remove the processor from the system board.
4. Loosen the four screws that secure the "goal posts" to the system board and pull the "goal posts" off the system board.

End of sequence. To replace the "goal posts," reverse this procedure.

Removal and Replacement

Removing the Modem

Disassembly Sequence

Hood

Air Baffle

Drive Cage

Mass Storage

Front Bezel

Speakers

Button Board & Cable

Headphone Board

Power Supply

Processor AMD Pentium II

Modem

NIC

Memory

RTC Battery

Serial Cable

System Board

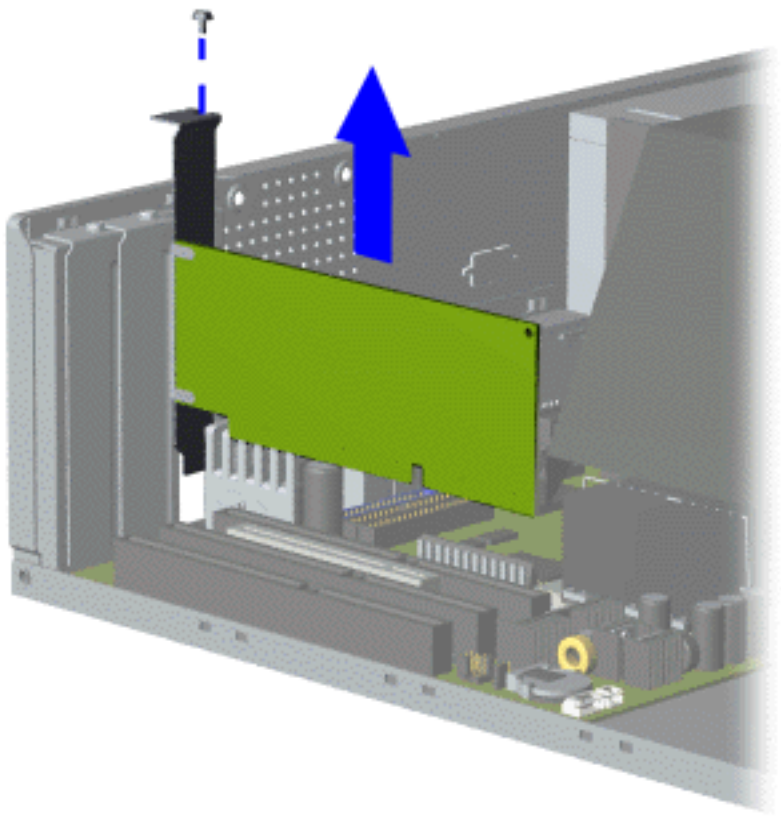

Removing the modem

1. Perform the preparation procedures.
2. Remove the hood.
3. Remove the screw from the modem bracket.
4. Unplug the modem board from the system board.

End of sequence. To replace the modem, reverse this procedure.

Removal and Replacement

Removing the Network Interface Controller (NIC)

Disassembly Sequence

Hood

Air Baffle

Drive Cage

Mass Storage

Front Bezel

Speakers

Button Board & Cable

Headphone Board

Power Supply

Processor AMD Pentium II

Modem

NIC

Memory

RTC Battery

Serial Cable

System Board

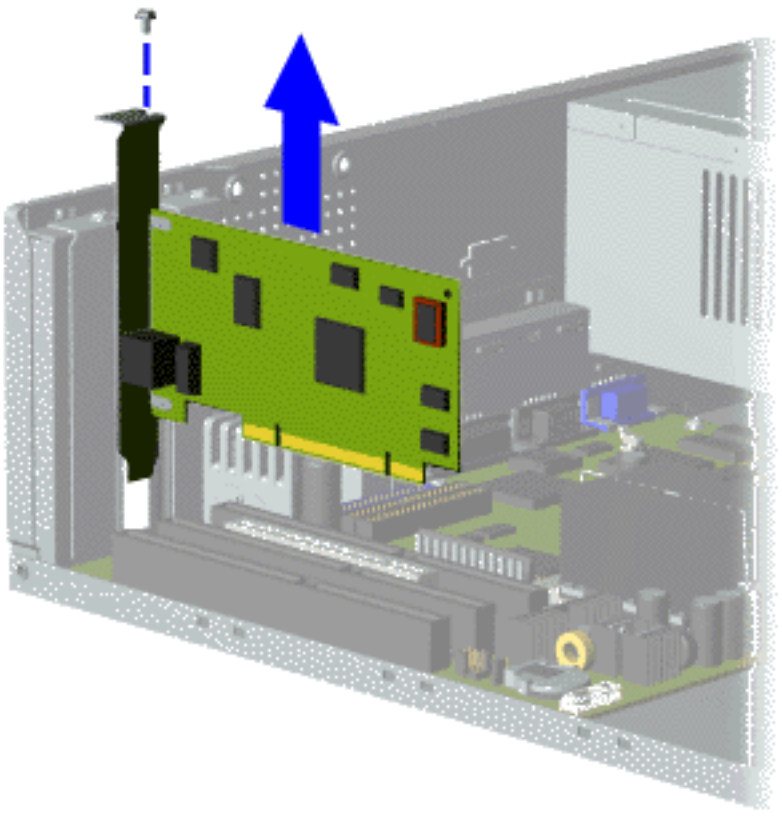

1. Perform the preparation procedures.
2. Remove the hood.
3. Remove the screw from the NIC bracket.
4. Unplug the NIC from its slot.

End of sequence. To replace the NIC, reverse this procedure.

Removal and Replacement

Removing Memory

Disassembly Sequence

Hood

Air Baffle

Drive Cage

Mass Storage

Front Bezel

Speakers

Button Board & Cable

Headphone Board

Power Supply

Processor AMD Pentium II

Modem

NIC

Memory

RTC Battery

Serial Cable

System Board

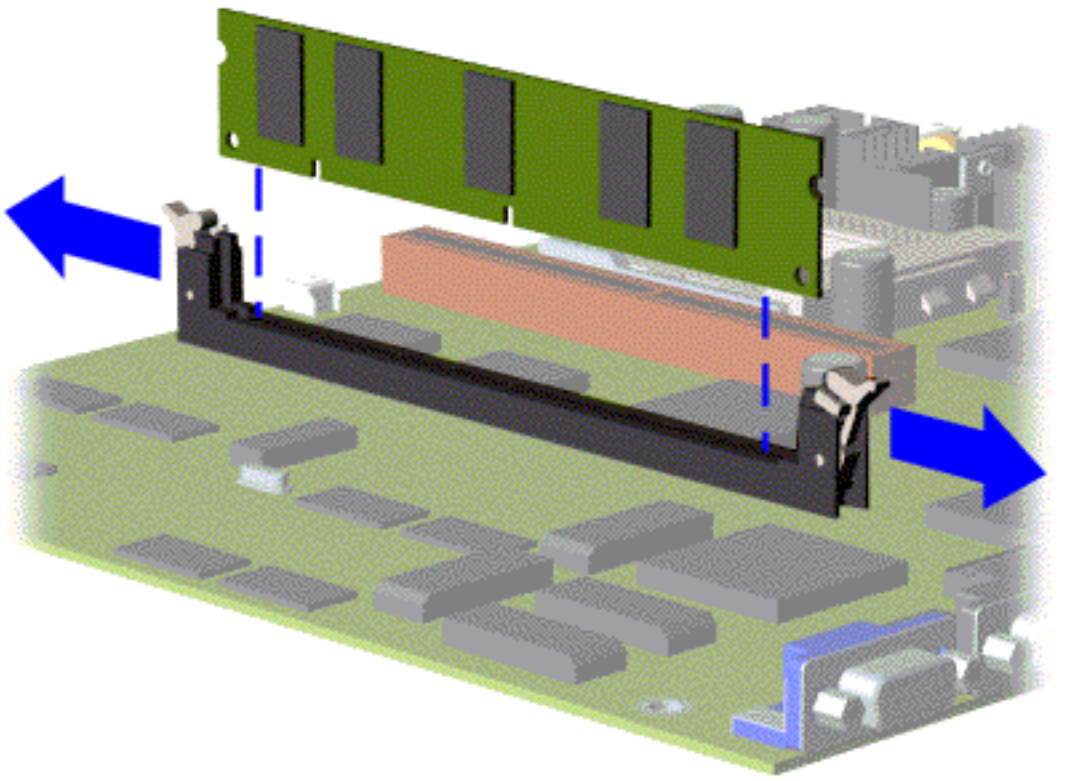

1. Perform the preparation procedures.
2. Remove the hood.
3. Move the air baffle out of the way.
4. Remove the drive cage from the chassis.
5. Locate the memory module.
6. Push out on the DIMM latches and slide the module out of its slot.

End of sequence. To replace memory module, reverse this procedure.

NOTE Install DIMMs from left to right using DIMMs of identical speed, to a maximum of 256-MB for the system, into the socket.

Removal and Replacement

Removing the Real Time Clock (RTC) Battery

Disassembly Sequence

Hood
Air Baffle
Drive Cage
Mass Storage
Front Bezel
Speakers
Button Board & Cable
Headphone Board
Power Supply
Processor AMD Pentium II
Modem
NIC
Memory
RTC Battery
Serial Cable
System Board

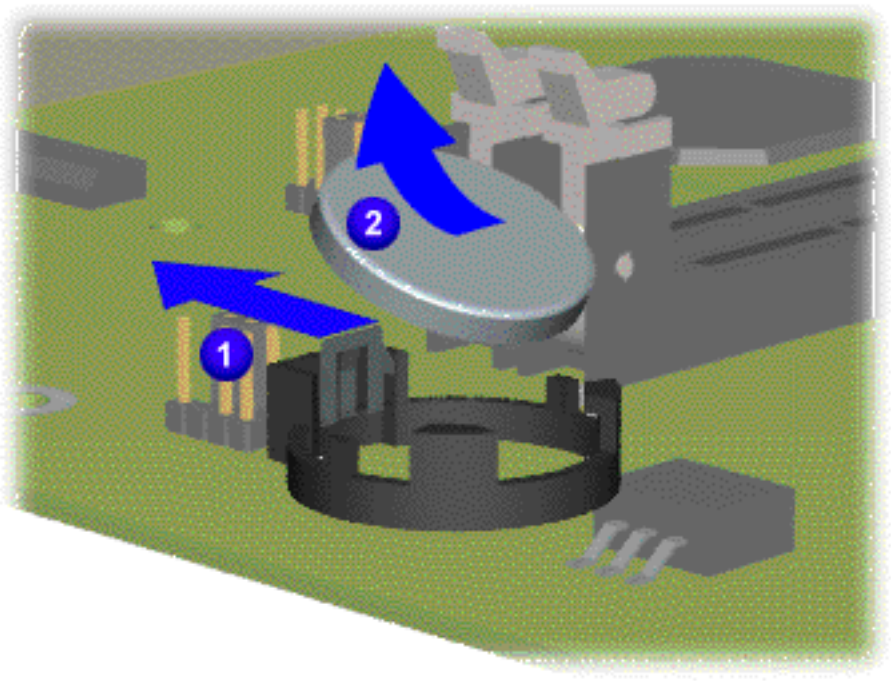

The lithium RTC battery is located in a removable socket on the system board.

1. Perform the preparation procedures.
2. Remove the hood.
3. Move the air baffle out of the way.
4. Remove the drive cage.
5. Locate the RTC battery.
6. Push down on the socket lever 1 and slide the RTC battery out of the socket 2.

End of sequence. To replace the RTC battery, reverse this procedure.

Removal and Replacement

Removing the Serial Cable Port Assembly

Disassembly Sequence

Hood
Air Baffle
Drive Cage
Mass Storage
Front Bezel
Speakers
Button Board & Cable
Headphone Board
Power Supply
Processor AMD Pentium II
Modem
NIC
Memory
RTC Battery
Serial Cable
System Board

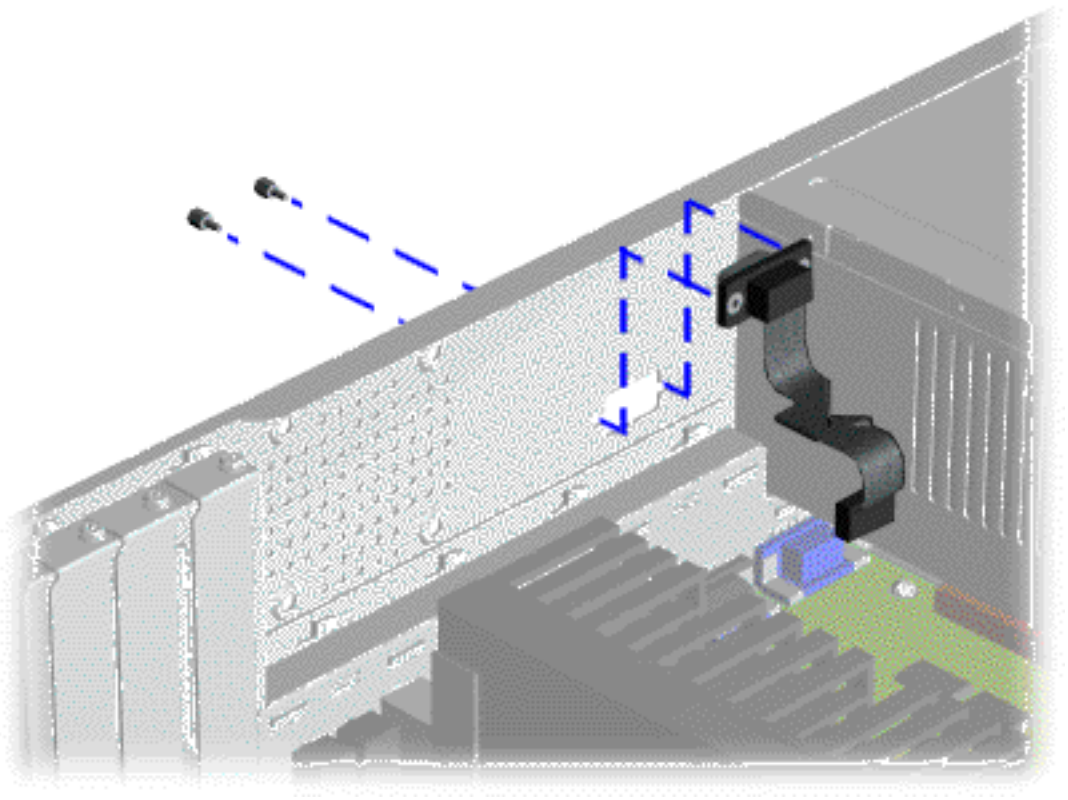

1. Perform the preparation procedures.
2. Remove the hood.
3. Disconnect the serial cable from the system board.
4. Remove the two screws that mount the serial cable assembly to the rear of the chassis.
5. Lift the serial cable assembly off the back of the unit.

End of sequence. To replace the serial cable port assembly, reverse this procedure.

Removal and Replacement

Removing the System Board

Disassembly Sequence

Hood
Air Baffle
Drive Cage
Mass Storage
Front Bezel
Speakers
Button Board & Cable
Headphone Board
Power Supply
Processor AMD Pentium II
Modem
NIC
Memory
RTC Battery
Serial Cable
System Board

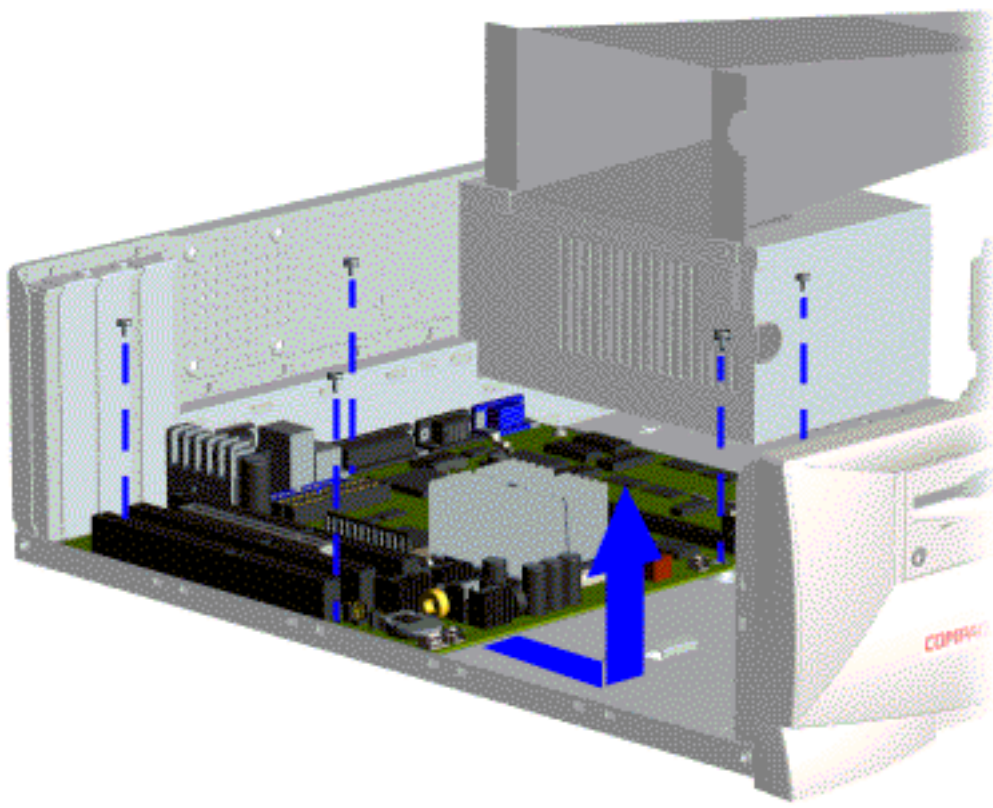

1. Perform the prepartion procedures.
2. Remove the hood.
3. Move the air baffle out of the way.
4. Remove the power supply.
5. Disconnect the data cables, audio, and power cables from the system board.
6. Remove the five screws from the edges of the board.
7. Slide the system board away from the input/output (I/O) panel and lift it out of the chassis.

End of sequence. To replace the system board, reverse this procedure.

Illustrated Parts

Illustrated Parts

System Unit

Mass Storage

Cables

Boards

Keyboards

Monitors

Miscellaneous Hardware

Return Kits

Documentation

This section provides illustrated parts and a reference for spare parts numbers for the Compaq Presario 2250, 2510, 2410 ES and 4240 ES Series Personal Computers.

When requesting information or ordering spare parts, the computer serial number should be provided to Compaq. The serial number is displayed on the right side of the hood.

Illustrated Parts

System Unit

Illustrated Parts
System Unit
Mass Storage
Cables
Boards
Keyboards
Monitors
Miscellaneous Hardware
Return Kits
Documentation

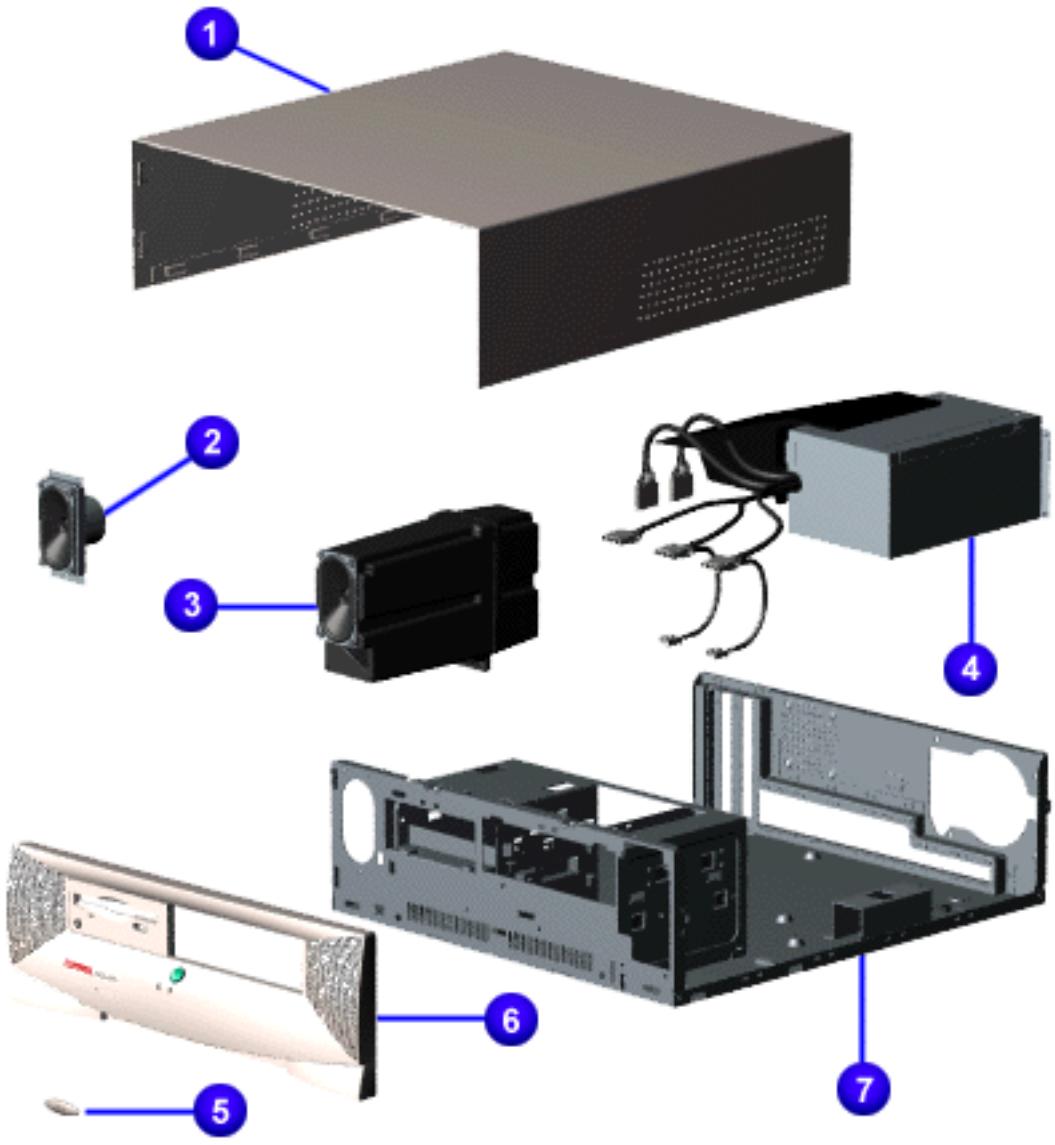

Description	Spare Part Number
1. Hood	298476-001
2. Left Speaker 2410ES & 4240ES	298479-001
3. Right Speaker with enclosure 2410ES & 4240ES	298480-001
4. Power Supply, Auto-detect 75 Watt 110 Watt (4240ES only)	319234-001 319235-001
5. Logo Kit (ROW) (EMEA)	319213-001 319213-002
6. Front Bezel 2410ES & 4240ES 2253, 2254, 2255, 2510	319279-001 319207-001
7. Chassis 2410 ES &4240ES 2253, 2254, 2255, 2510	319209-001 319268-001

Illustrated Parts

Mass Storage

Illustrated Parts
System Unit
Mass Storage
Cables
Boards
Keyboards
Monitors
Miscellaneous Hardware
Return Kits
Documentation

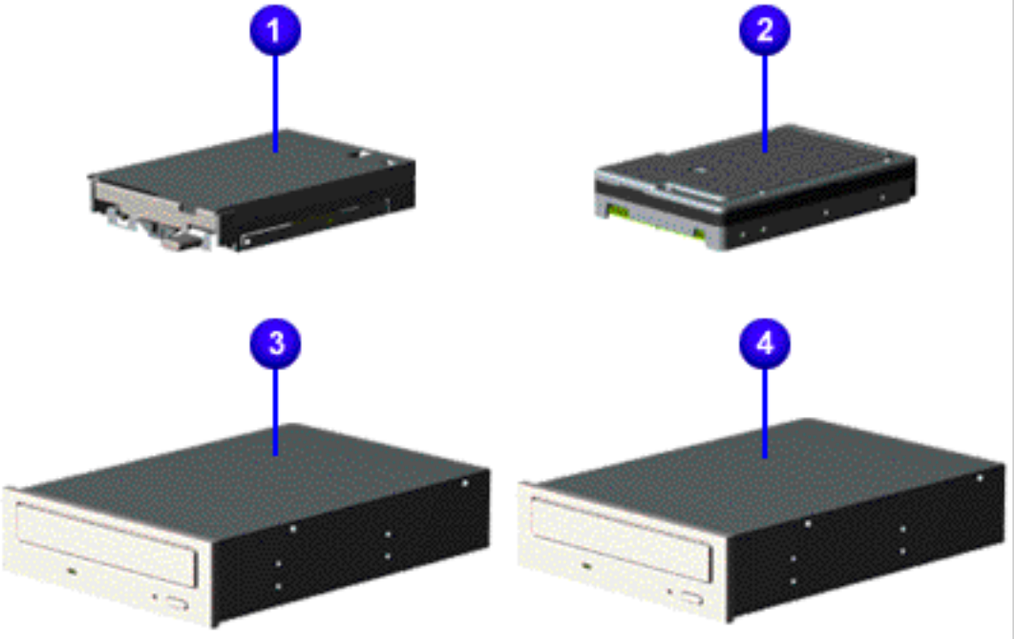

Description	Spare Part Number
1. Diskette Drive, 1.44 MB	239612-401
2. Hard Drive, IDE	
3.2 GB	337564-001
4.0 GB	286248-001
6.0 GB	271127-001
8.0 GB	298464-001
3. CD Drive, IDE, 32×	317212-001
4. Digital Versatile Disc (DVD) Drive (4240 ES models only)	317213-001

Illustrated Parts

Cables

Illustrated Parts
System Unit
Mass Storage
Cables
Boards
Keyboards
Monitors
Miscellaneous Hardware
Return Kits
Documentation

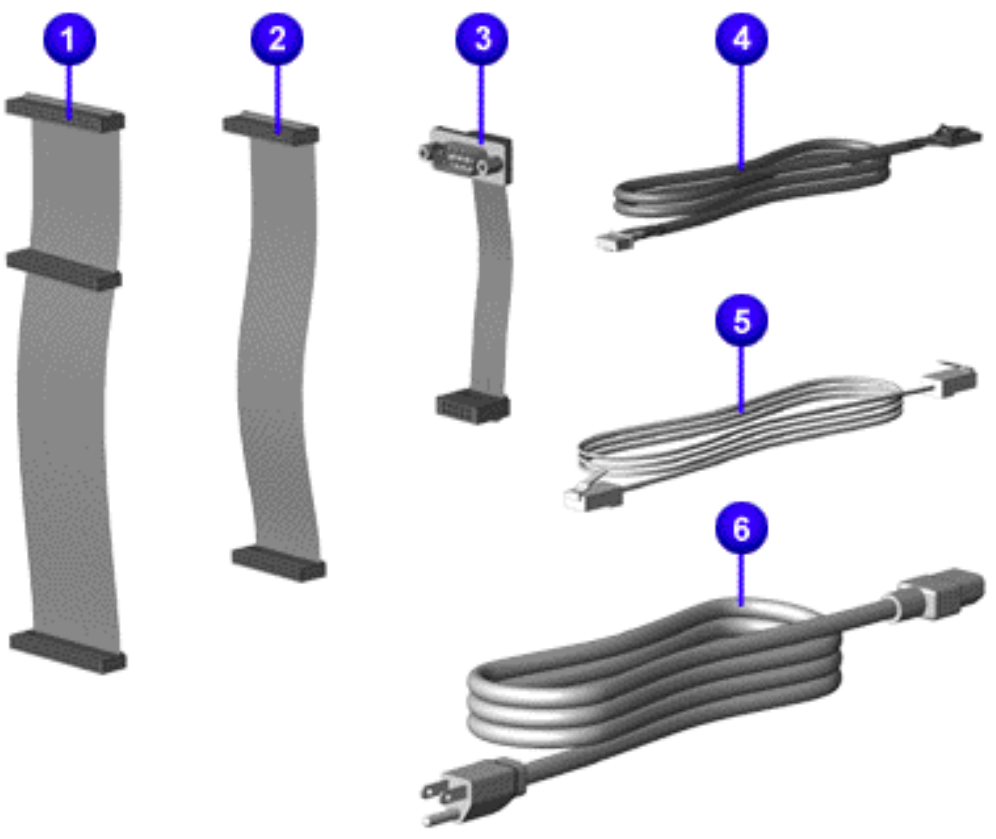

Description	Spare Part Number
Cable Kit, Miscellaneous	
Cable Kit, Misc. 1. HD/CD-ROM 2. Diskette 4. CD-ROM audio	170720-001
Cable Kit, Misc. (4240 ES only) 1. HD/CD-ROM data 2. Diskette data 3. Serial Port 4. CD-ROM audio Game USB (not shown) Button Board (not shown)	337562-001
5. Cable Kits	
Modem, US, Puerto Rico, Canada, Carribean, Latin America, Brazil	137256-001
Modem, Norway	165224-091
Modem, United Kingdom	165224-033
Modem, APD, TWN, PRC, JPN, SP	137256-001
Note: Some modem cable kits may contain a modem adapter for the specific region.	
6. Power Cords	
Australia/New Zealand	238472-005
Japan	238468-008
APD, United Kingdom	238467-004
US, Brazil, Thailand, Canada, Carribbean, Latin America, Taiwan	121258-401
Italy	238469-005
Denmark, Spain	238470-005
PRC	298594-AA1
Switzerland	238471-004
France, Germany, Norway, Sweeden, Portugal, Netherlands, Finland, Belgium	238466-005
Cable Modem Adapter 340398-xxx. Click on the box to determine the dash number for the cable modem adapter for a particular location. Australia/New Zealand -011	

Illustrated Parts

Standard and Optional Boards

Illustrated Parts
System Unit
Mass Storage
Cables
Boards
Keyboards
Monitors
Miscellaneous Hardware
Return Kits
Documentation

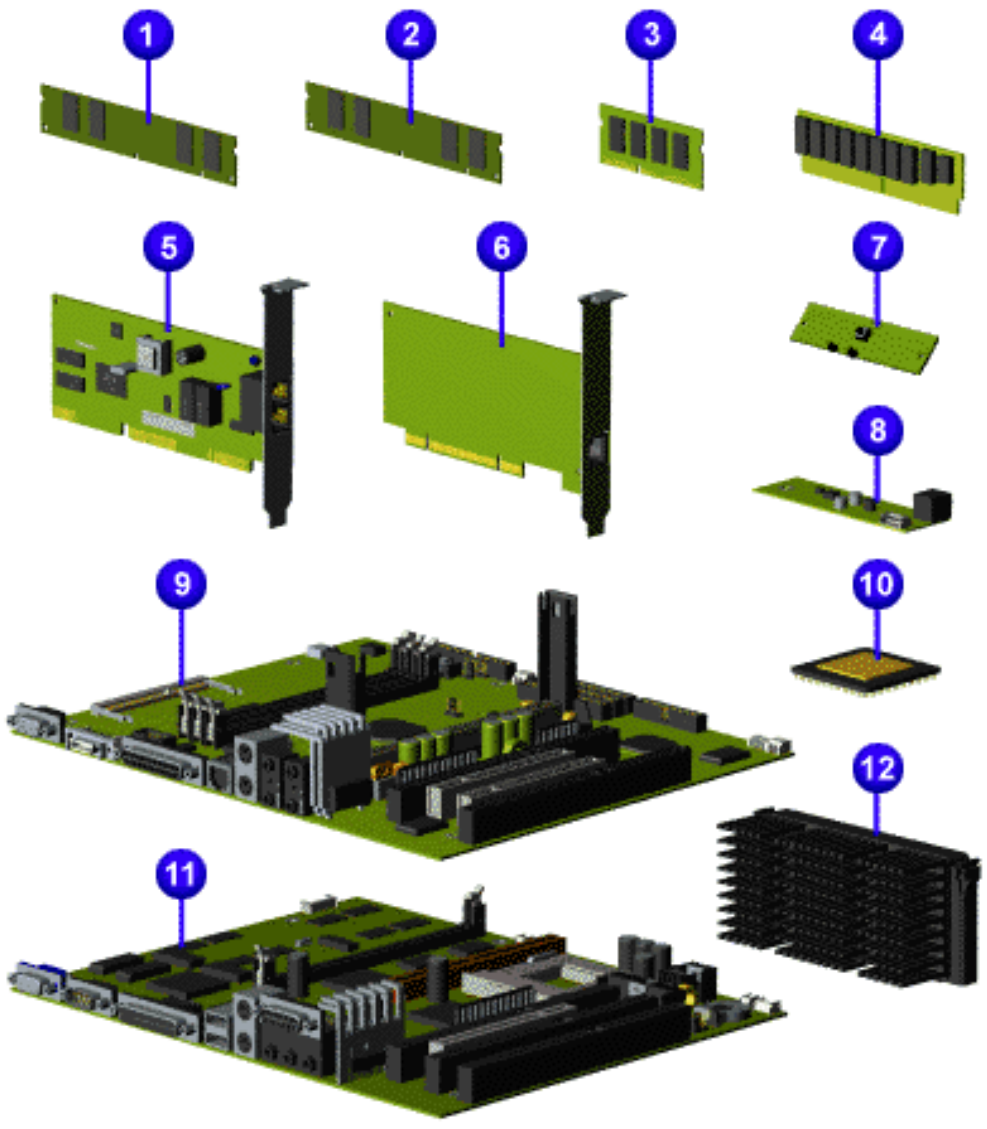

Description	Spare Part Number
1. 16 MB DIMM (60 ns, SDRAM)	278066-001
16 MB DIMM (60 ns, SDRAM (4240 ES only)	319237-001
2. 32-MB DIMM (60ns, SDRAM) (4240 ES only)	319326-001
3. 256-KB L2 pipeline burst cache	243117-001
4. 512-KB L2 pipeline burst cache	243117-002
5. Compaq Netelligent 10/100 TX UTP Network Interface Controller (NIC)	317606-001
6. Modem, 56K, DSVD, Controllerless	292269-003
Modem, 56K (Spain only)	170762-073
Modem, 33.6K/56K	317296-001
7. Bezel Button Board (cable not shown)	319206-001
8. Headphone Board	298469-001
9. System Board, 2254, 2255, 2510, and 2410ES series with 2MB VRAM	319208-001
10. Processor, AMD K6, 233-MHz (with heatsink, not shown)	319281-001
Processor, AMD K6, 266-MHz (with heatsink, not shown)	319236-001
11. System Board, 4240ES Series, with 2MB VRAM	319277-001
12. Processor, Pentium II, 333-MHz	320666-001

Illustrated Parts

Keyboards

Illustrated Parts
System Unit
Mass Storage
Cables
Boards
Keyboards
Monitors
Miscellaneous Hardware
Return Kits
Documentation

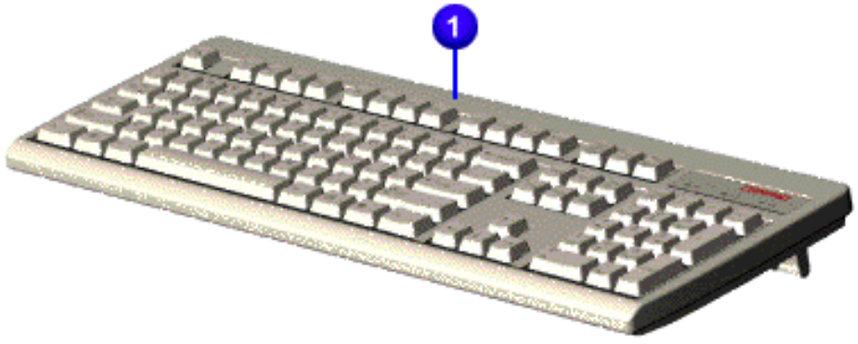

Keyboards	
Description	**Spare Part Number**
1 Keyboard, US Education	304286-003
2 Internet Keyboard	340869-xxx. Click on the box to determine the dash number for the keyboard for a particular location. Asia/Pacific 283

Illustrated Parts

Monitors

Illustrated Parts
System Unit
Mass Storage
Cables
Boards
Keyboards
Monitors
Miscellaneous Hardware
Return Kits
Documentation

	Description	Spare Part Number
1	**Compaq FP500**, TFT (speakers not shown) Speaker brackets (not shown) Back leg	340615-001 341043-001 341044-001
2	**Compaq Presario MV** monitors (speakers not shown) **MV400** North America Northern Hemisphere Southern Hemisphere	 326902-001 326902-022 326902-B34
	MV500 Northern Hemisphere TCO95 Southern Hemisphere	340707-001 340707-026 340707-B34
	MV700 Northern Hemisphere EMEA Southern Hemisphere	340708-001 340708-026 340708-B34
3	**Compaq Presario 1525** Northern Hemisphere, MPR Northern Hemisphere, POL Southern Hemisphere, MPR North America, POL	241504-002 241504-005 241504-003 241504-001
	Compaq Presario 1725 Northern Hemisphere, MPR Northern Hemisphere, POL Southern Hemisphere, MPR North America, POL	241507-002 241507-005 241507-003 241507-001
Attachable speakers (shown on 3)		320426-001
Monitor audio cable (not shown)		268244-001

Compaq Presario V410Color Monitor, North America	285073-001
Compaq Presario V410Color Monitor, EMEA, Northern Hemisphere	285073-022
Compaq Presario V410Color Monitor, EMEA, Southern Hemisphere	285073-B34
Compaq Presario V510Color Monitor, North America	295610-001
Compaq Presario V510Color Monitor, EMEA, Northern Hemisphere	295610-022
Compaq Presario V510Color Monitor, EMEA, Southern Hemisphere	295610-B34

Illustrated Parts

Miscellaneous Hardware

Illustrated Parts
System Unit
Mass Storage
Cables
Boards
Keyboards
Monitors
Miscellaneous Hardware
Return Kits
Documentation

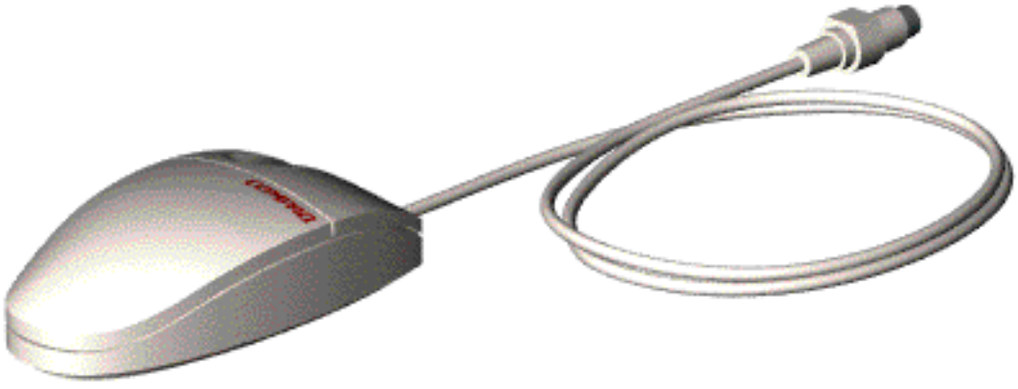

Compaq Mouse

Description	Spare Part Number
Mouse	199181-401
Drive Cage	327280-001
Hard Drive Mounting Bracket	243231-001
Miscellaneous Hardware Kit includes: Chassis Feet (10 each) Standoff (5 each) 75 Watt Power Supply Air Baffle 110 Watt Power Supply Air Baffle	298592-001

Illustrated Parts

Return Kits

Illustrated Parts
System Unit
Mass Storage
Cables
Boards
Keyboards
Monitors
Miscellaneous Hardware
Return Kits
Documentation

Description	Spare Part Number
Return kit, US	319211-001
Carton and buns, International	319211-002
Return kit with packing, Compaq Presario V510 monitor	295627-001
Return kit with packing, Compaq Presario V410 monitor	210545-001
Return kit with packing, Compaq Presario 1525 monitor	241513-001
Return kit with packing, Compaq Presario 1725 monitor	241514-001
Return kit with packing, Compaq Presario MV400 monitor	341082-001
Return kit with packing, Compaq Presario MV500 monitor	341083-001
Return kit with packing, Compaq Presario MV700 monitor	341084-001
Return kit with packing, Compaq Presario FP500 monitor	341139-001
Return kit (Compaq Presario 1525 monitor), 5 each	241517-001
Return kit (Compaq Presario 1725 monitor), 5 each	241518-001

Illustrated Parts

Documentation

Illustrated Parts

System Unit

Mass Storage

Cables

Boards

Keyboards

Monitors

Miscellaneous Hardware

Return Kits

Documentation

Description	Spare Part Number
Manual Kit, Brazilian Portuguese	319210-201
Manual Kit, Latin American Spanish	319210-161
QuickRestore Kit Models: 2410 ES, 2510, 2250 Series	319324-xxx (Windows 95)* 319323-xxx (Windows 98)*
QuickRestore Kit Model: 4240 ES	320891-xxx (Windows 95)* 320892-xxx (Windows 98)*
Quick Reference Guide (1 each)	162212-001
Quick Reference Guide (5 pack)	106854-001
Quick Reference Guide (1 each, quarterly subscription)	184960-001
Quick Reference Guide (5 pack, quarterly subscription)	184961-001
QuickFind for Windows, North America, Latin America, Asia/Pacific	137906-0xx**
QuickFind for Windows, Europe, Middle East, Africa	137907-0xx**

* (1) The suffix numbers -xxx depend on the country, as follows: Belgium 381, Brazil 201, Denmark 081, France 051, Germany 041, Italy 061, Norway 091, Netherlands 331, Spain 071, Sweden 101, Switzerland 311, UK 031.

**QuickFind is updated monthly. To complete the QuickFind part number, add the suffix from the table below for the desired month. If you do not specify the 3-digit suffix, the default is the current month in which the order is placed.

Suffix	Month	Suffix	Month	Suffix	Month	Suffix	Month
-001	January	-004	April	-007	July	-010	October
-002	February	-005	May	-008	August	-011	November
-003	March	-006	June	-009	September	-012	December

Jumper and Switch Information

Click on a selection below for jumper and switch information.

4240 ES System Board
Connectors
Core Voltage Settings

2250 Series, 2510, 2410 ES System Board
Connectors
Core Voltage Settings

Mass Storage
3.2-GB Hard Drive
4.0-GB Hard Drive
6.0-GB Hard Drive
8.0-GB Hard drive
32xCD Drive
DVD Drive

This section contains jumper and switch information for system board jumpers, system I/O board connectors, hard drives, CD Drives, and DVD drives.

System Board Configuration

Model: 4240 ES

Click on a reference designator to get its function and a connector description.

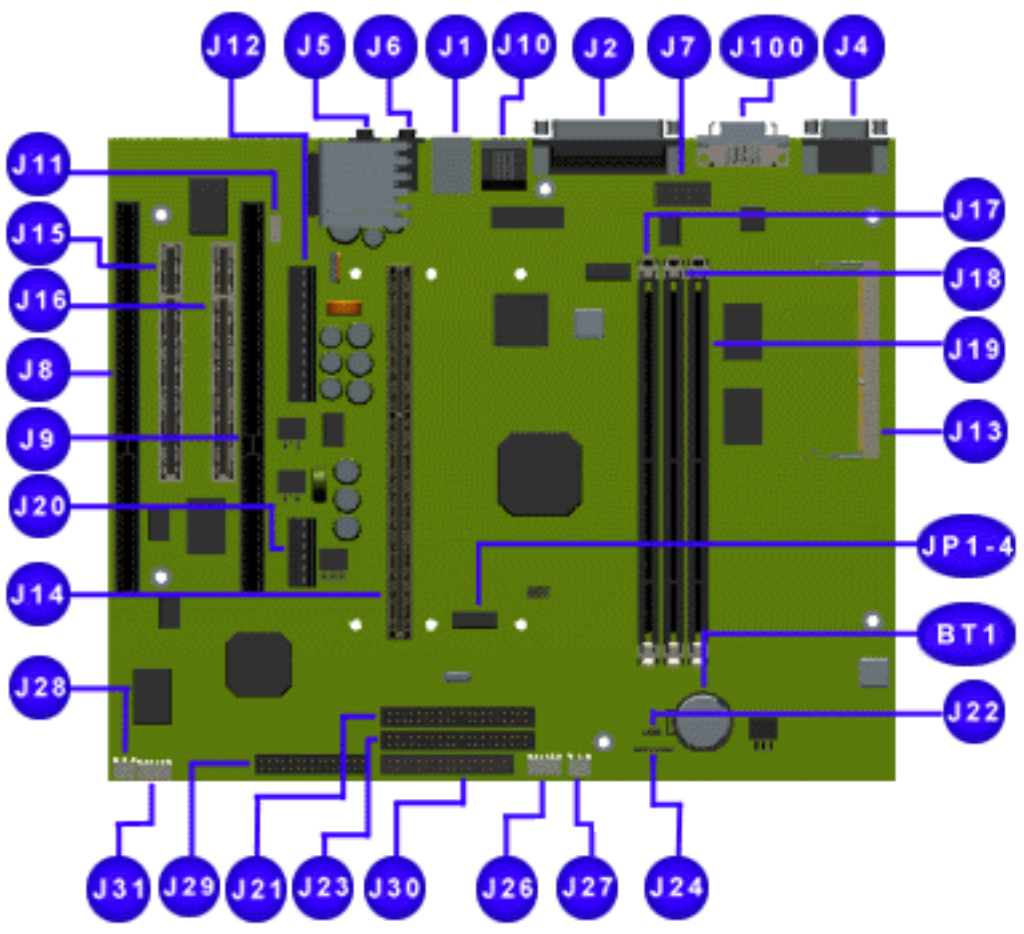

Note: Core voltage for the system board is set by the processor.

4240 ES System Board Core Voltage		
	233 MHz	266 Mhz
JP1	All Open	Short 1 and 2, 5 and 6
JP2	Short 2 and 3	Short 2 and 3
JP2	Short 1 and 2	Short 1 and 2
JP3	Short 5 and 6 (3.2 volts)	All Open (2.2 volts)
JP4	All Open	Short 3 and 4

Connector Information

Function	Description	Reference Designator
Keyboard	Miniature 6-pin	½ J1
Mouse	Miniature 6-pin	½ J1
Parallel port	DSUB 25-pin	J2
Video	15-pin VGA	J4
Flat panel display	20-pin	J100
Ethernet jack	RJ45	J10
Microphone in	Mini stereo	½ J6
Speaker out	Mini stereo	½ J5
Line in	Mini stereo	½ J6
Line out	Mini stereo	½ J5
DIMM sockets	168-pin DIMM	J17, J18, J19
SODIMM socket	144-pin SODIMM	J13
PCI slots	32-bit PCI connector	J15, J16
ISA slots	16-bit ISA connector	J8, J9
Processor slot	Slot 1 connector	J14
Slot 1 clock multiplier	2-pin header	JP1 -- JP4
Clear CMOS	3-pin header	J22
Serial port	DB9	J7
GamePort/USB	24-pin 2mm connector	J29
Sleep button & LEDs	5-pin 2mm connector	J26
Battery socket	2-pin socket	BT1
CD-ROM audio	4-pin header, key 2	J11
IDE drives	40-pin headers, key 20	J23 (primary), J21 (secondary)
Diskette drive	34-pin header	J30
Headphone board	5-pin 2mm connector	J31
Internal speakers	2-pin header	J27, J28
Second fan	4-pin header, key 2	J24
+3.3V power	6-pin header	J20
Power supply	12-pin ATPWR header	J12

Back to Top

System Board Configuration

Models: 2250 series, 2410 ES, 2510

Click on a reference designator to get its function and a connector description.

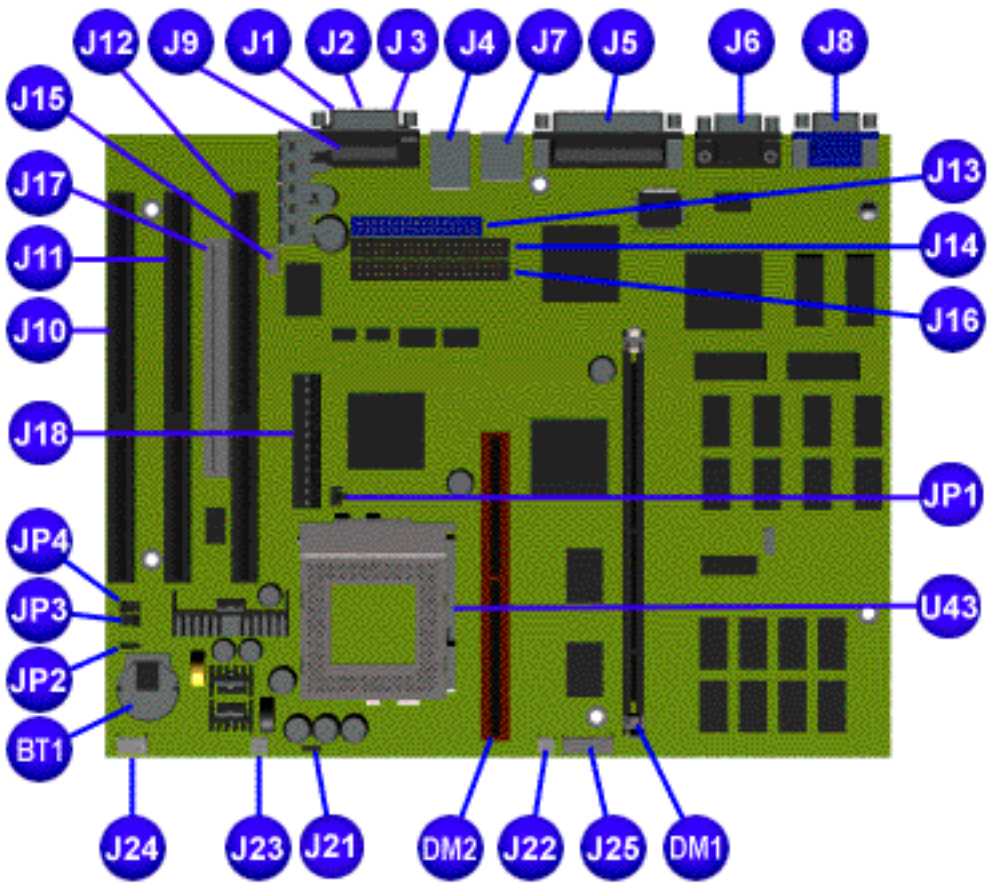

Note: Core voltage for the system board is set by the processor.

2253, 2254, 2255, 2510, 2410 ES Series System Board Core Voltage		
	233 MHz	266 Mhz
JP1	All Open	Short 1 and 2, 5 and 6
JP2	Short 2 and 3	Short 2 and 3
JP2	Short 1 and 2	Short 1 and 2
JP3	Short 5 and 6 (3.2 volts)	All Open (2.2 volts)
JP4	All Open	Short 3 and 4

Connector Information

Function	Description	Reference Designator
Keyboard	Miniature 6-pin	½ J4
Mouse	Miniature 6-pin	½ J4
Parallel port	DSUB 25-pin	J5
Serial	DSUB 15-pin	J6
USB	USB connector	J7
Video	15-pin VGA	J8
Game	DSUB 15-pin	J9 *(Combined stacked connector)*
Microphone in	Mini stereo	J3 *(Combined stacked connector)*
Speaker out	Mini stereo	J1 *(Combined stacked connector)*
Line out	Mini stereo	J2 *(Combined stacked connector)*
DIMM Socket	168-pin DIMM	DM1
SODIMM socket	144-pin SODIMM	DM2
PCI slot	32-bit PCI connector	J17
ISA slots	16-bit ISA connector	J10, J11 (combo), J12
CPU core voltage select	6-pin header	JP3 & JP4
Socket 7	321-pin PGA	U43
Socket 7 clock multiplier	6-pin header	JP1
Battery voltage to SMC932	3-pin header	JP2
Battery Socket	Battery holder	BT1
CD-ROM audio	4-pin header, key 2	J15
IDE drives	40-pin headers, key 20	J14 (primary), J16 (secondary)
Diskette drive	34-pin header	J13
Headphone board	5-pin 2mm connector	J24
Internal speakers	2-pin header	J23 (L), J22 (R)
Second fan	4-pin header, key 2	J21
Reset (NA)	2-pin header	J19
Button board	5-pin header	J25
Power supply	12-pin ATPWR header	J18

Jumper and Switch Information

This section contains jumper and switch information for hard drives, CD Drives, and DVD drives.

3.2-GB IDE Hard Drive Jumper Settings

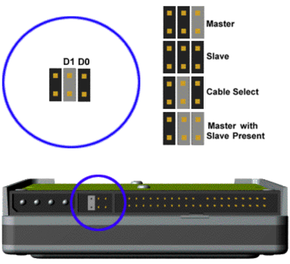

Back to Top

4.0-GB IDE Hard Drive Jumper Settings

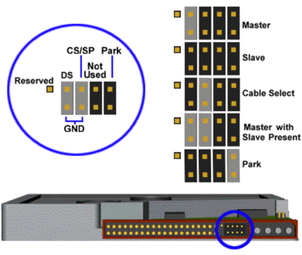

Back to Top

6.0-GB IDE Hard Drive Jumper Settings

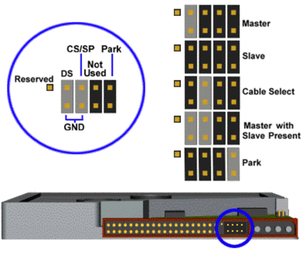

Back to Top

8.0-GB IDE Hard Drive Jumper Settings

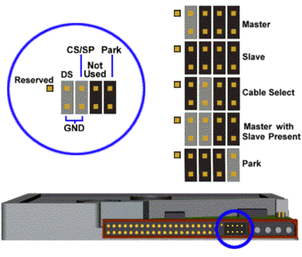

Back to Top

32X CD Drive Jumper Settings

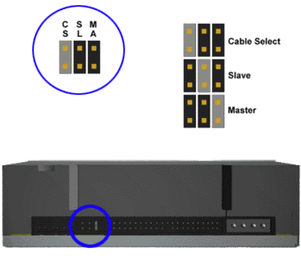

Back to Top

Digital Versatile Diskette Jumper Settings

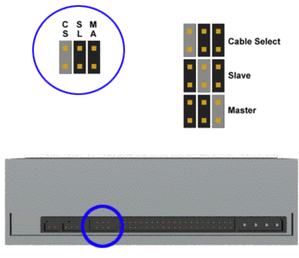

Back to Top

Maintenance & Service Guide
Dell™ Precision 2250 Series
2510, 2410 & 4240 Workstations

Specifications

This section provides physical, environmental and performance specifications for the Compaq 2250, 2510, 2410 ES and 4240 ES Series of Personal Computers.

Model: 4240 ES

System
Video Memory
System Interrupts
System I/O
System DMA
Power Supply

Model: 2254, 2255, 2510, 2410 ES

System
Video Memory
System Interrupts
System I/O
System DMA
Power Supply

Mass Storage
Diskette Drive
3.2-GB Hard Drive
4.8-GB Hard Drive
6.8-GB Hard Drive
8.6-GB Hard Drive
CD Drive
DVD Drives

Communication
Modem (56Kbps)
Modem (33.6 Kbps)

System Specifications

Models: 4240 ES, 2250 Series, 2410 ES, 2510

System Specifications		
	U. S.	Metric
Dimensions		
Height	5.23 in	13.3 cm
Depth	17.88 in	45.2 cm
Width	15.76 in	40.03 cm
Weight	22 lbs	9.99 kg
Cross Shipping Weight	31.20 lbs.	14.17 kg
Input Requirements		
Nominal Line Voltage	100 to 264 VAC	100 to 264 VAC
Range Line Voltage	90 to 132 VAC	180 to 264 VAC
Frequency	47 to 63 Hz	47 to 63 Hz
Input Current	5.2 at 90 VAC	3.6 at 180 VAC
Power (watts)		
Steady State - 4240 ES Series (2254, 2255, 2510, 2410 ES Series.	110 Watt 75 Watt	
Environmental Requirements		
Temperature		
Operating	50° to 95° F	10° to 35° C
Shipping	40° to 140° F	-20° to 60° C
Humidity (non-condensing)		
Operating	8% to 90%	8% to 90%
Non-operating	5% to 95%	5% to 95%
Maximum Altitude (unpressurized)		
Operating	10,000 ft	3048 m
Non-operating	30,000 ft	9144 m

Back to Top

System Video Memory

Model: 4240 ES

Video Memory		
Resolution	Colors	Vertical Refresh (Hz)
1280 × 1024	256	75
800 × 600 (Default)	64K	75
640 × 480	64K	75
1024 × 768	256	75
800 × 600	256	75
640 × 480	256	75

Back to Top

System Interrupts

Model: 4240 ES

System Interrupts	
Hardware IRQ	System Function
IRQ 0	Refresh Timer
IRQ 1	Keyboard
IRQ 2	Interrupt Controller Cascade
IRQ 3	Modem (COM 2) shared data/fax
IRQ 4	Serial Port (COM 1)
IRQ 5	System Audio*
IRQ 6	Diskette Drive
IRQ 7	Parallel Port (LPT 1)*
IRQ 8	Real time Clock
IRQ 9	Available
IRQ 10	3Com Modem if present*
Hardware IRQ	System Function
IRQ 11	PCI Bus shared with Video, USB, DVD
IRQ 12	Mouse
IRQ 13	Numeric Coprocessor
IRQ 14	Disk Drive (Primary)
IRQ 15	Disk Drive (Secondary)

*Default Configuration; Other Configurations are the following:
System Audio - IRQ 5, 7, 9, 10, none
Parallel Port - IRQ 5, 7, 9, 10, none
System Audio - IRQ 7, 9, 10, none
Serial Port - IRQ 3, 5, 7, 9, 10, 12, none

Back to Top

System I/O

Model: 4240 ES

System I/O	
I/O Address (Hex)	System Function (Shipping Configuration)
000 - 00F	DMA Controller # 1
010 - 01F	Unused
020	Interrupt Controller # 1 Control Register
021	Interrupt Controller # 1 Mask Register
022 - 03D	Interrupt Controller Aliases
040 - 043	Counter/Timer
044 - 048	Unused
049 - 04F	Counter/Timer Aliases
050-053	Unused
054	Keyboard Controller Data Register
055	Port B: SERR\NCHK NMI, Speaker Refresh
056 - 063	Unused
064	Keyboard Controller Command/Status Register
065 - 069	Unused
070 - 073	NMI Enable/Real-Time Clock
074	IPC Extended Index
075	IPC Extended Data
076-07F	Unused
080 - 08F	DMA Page Registers
090 - 093	Unused
094	Port 92 (fast reset and A20 gate)
095 - 098	Unused
0A0 - 0A1	Interrupt Controller # 2
0A2	APM Control
0A3	APM Status
0A4-0B0	Unused
0C0 - 0DF	DMA Controller # 2
I/O Address (Hex)	System Function (Shipping Configuration)
0E2 - 0E3	DDC2 Registers
0E4 - 0EF	Unused
0F0	Ultra I/O Indexed Configuration Registers
0F1 - 0F7	Modem Configure
0F8 - 0FF	483 Fast x86/Fast Reset
0F9 - 0F1	Coprocessor Busy Clear/Reset
0F2 - 0F8	Unused
0F9	Reset
0FC-0FF	Unused
100 - 103	Unused
182	Video Controller: POS 102 Register
183-1D7	Unused
132 - 16F	Unused
170 - 177	Secondary IDE Controller (CD Drive)
178 - 1E8	Unused
1F0 - 1F7	Primary IDE Controller (Hard Drive)
1F8 - 208	Unused
209	Joystick (Decode in ES 1869)
292 - 218	Unused
220 - 22F	Entertainment Audio
230 - 258	Unused
260 - 261	Reserved-Modem use during POST
264 - 277	Unused
278 - 279	Reserved Parallel Port (LPT 2)
280 - 2E7	Unused
2E8 - 2EF	Reserved Serial Port (COM 4)
2F0 - 2F7	Unused
2F8 - 2FF	Modem (COM 2)
330 - 331	MPU-401 (Decode in ES 1869)
332 - 360	Unused
170 - 377	Reserved-Diskette Drive Controller 2 (Used for SIO lock/unlock)
378 - 37F	Parallel Port (LPT 1)
380 - 3E7	Unused
3E8 - 3EF	IM Synthesizer - ES 1869
3BC - 3B3	Unused
3B4 - 3B5	Video Controller: Monochrome
3B6 - 3B9	Unused
3BA	Video Controller: Monochrome
3BB	Unused
3BC - 3BF	Reserved-Parallel Port
3C0 -3CF	Video Controller: VGA Registers
3D0 - 3D3	Unused
3D4 - 3D5	Video Controller: Color
I/O Address (Hex)	System Function (Shipping Configuration)
3D6 - 3D9	Unused
3DA	Video Controller: Color
3DB - 3E7	Unused
3E8 - 3EF	Reserved: Serial Port (COM 3)
3F0 - 3F7	Diskette Controller (Primary)
3F6 - 3F7	IDE Interface (Hard disk and CD or DVD Drive)
3F8 - 3FF	Serial Port (COM 1)
400	Interrupt Controller 1 Edge/Level Control
401	Interrupt Controller 2 Edge/Level Control
402 - 437	Unused
438 - 43A	Parallel Port ECP Mode
77A - 77A	Parallel Port ECP Mode
CF8	PCI Configuration Index (32 bit I/O only)
CFC - CFF	PCI Configuration Data
46E8	Video Controller: Adapter Step

Back to Top

System Memory

Model: 4240 ES

System Memory		
Size	Memory Address	System Function
640 K	00000000 - 000FFFFF	Base Memory
128 K	00100000 - 00120FFF	Extended Memory
32 K	000C0000 - 000C7FFF	Video ROM
32 K	000C8000 - 000C7FFF	Legacy USB Device Header (when legacy support enabled)
48 K	000E0000 - 000BFFFF	Unused (Not available for option cards. May use for UMBs.)
16 K	000EC000 - 000EFFFF	16-bit cacheable, shadowable, read-only memory. Not available for option cards.
64 K	000F0000 - 000FFFFF	System BIOS ROM shadow image
64 K	00100000 - 00FFFFFF	Standard Extended Memory
64 M	01000000 - 04FFFFFF	Rest of Extended Memory
32 M	05000000 - 07FFFFFF	Unused
512 K	08000000 - 08087FFF	Standard Dual Video Memory
512 K	08080000 - 08FFFFFF	Optional Dual Video Memory
1915 M	08100000 - 7FFFFFFF	Unused
16 M	80000000 - 80FFFFFF	Memory mapped I/O devices
2-2000 M	81000000 - FDFDFFFF	Unused-System ROM aliases
128 K	FDFE0000 - FDFFFFFF	System ROM (alias)
32 M	FE000000 - FFFDFFFF	Unused
128 K	FFFE0000 - FFFFFFFF	System BIOS ROM

Back to Top

System DMA

Model: 4240 ES

System DMA		
Hardware	System Function (Default)	Alternate Mappings
DMA 0	ECP Parallel	5, 2, none
DMA 1	Entertainment Audio	0, 3, none
DMA 2	Diskette Drive	None
DMA 3	Entertainment Audio	0, 1, none
DMA 4	Internally used for cascading	
DMA 5	Available	
DMA 6	Available	
DMA 7	Available	

Back to Top

Power Supply

Model: 4240 ES

Power Supply		
	U. S.	Metric
Input Specifications		
Nominal Line Voltage	100 to 120 VAC	220 to 240 VAC
Range Input Line	90 to 132 VAC	180 to 264 VAC
Frequency Range	47 to 63 Hz	47 to 63 Hz
Power Factor	0.6	0.6
Input Power	200 Watts	200 Watts
Input Current	5.2 at 90 VAC	3.6 at 180 VAC
Inrush Current	80 A at 132 VAC (cold start)	80 A at 264 VAC (cold start)
Holdup Time	16 ms from zero crossing at 90 VAC	16 ms from zero crossing at 240 VAC
General Specifications		
Full Output Rating	5v 12.5" and 5.00v 5.7v 90° F and 10,000 ft (derate linearly)	5v 50° C and 13.4 m 5v 32° C and 3048 m (derate linearly)
Minimum Load	3.0 A on + 5.0 V output 0.04 A on 12 V output	3.0 A on + 5.0 V output; 0.04 A on 12 V output
Ambient Temperature Range		
Operating	50° to 122° F	10° to 50° C
Storage	-40° to 155° F	-40° to 68° C
Dielectric Voltage Withstand		
Input to Ground	2500 VAC/1 second	
Safety Standard	UL 1950, CSA 22.2 #950 or CSA 22.2 #234; TUV/VDE EN 60 950 (VDE0805+11.91); IMSO-754 (74-SEC) 207/93	
Input Transient Susceptibility		
Common and Differential Mode (superimposed on AC line).	2500 V, 1 ps, damped sinusoidal; 500 V, 10 ps pulse	
Differential Mode	25% step change in AC input voltage	

System Video Memory

Models: 2250 Series, 2410 ES, 2510

Video Memory		
Resolution	Colors	Vertical Refresh (Hz)
1280 × 1024*	256	
1024 × 768	64K	75
800 × 600 (Default)	64K	75
640 × 480	64K	75
1024 × 768	256	75
800 × 600	256	75
640 × 480	256	75
*The 2254, 2255, 2510, 2410 ES Series series high resolution of 1280 × 1024 × 256 can only be achieved if the monitor supports this resolution.		

Back to Top

System DMA

Models: 2250 Series, 2410 ES, 2510

System DMA		
Hardware	System Function (Default)	Alternate Mappings
DMA 0	Available	
DMA 1	Entertainment Audio	0, 3, none
DMA 2	Diskette Drive	None
DMA 3	Available	
DMA 4	Internally used for cascading	
DMA 5	Entertainment Audio	0, 1, none
DMA 6	Available	
DMA 7	Available	

Back to Top

System Interrupts

Models: 2250 Series, 2410 ES, 2510

System Interrupts	
Hardware IRQ	System Function
IRQ 0	Refresh Timer
IRQ 1	Keyboard
IRQ 2	Interrupt Controller Cascade
IRQ 3	Modem (COM 2) shared data/fax
IRQ 4	Serial Port (COM 1)
IRQ 5	System Audio*
IRQ 6	Diskette Drive Controller
IRQ 7	Parallel Port (LPT 1)*
IRQ 8	Real-Time Clock
IRQ 9	USB
IRQ 10	Available
IRQ 11	PCI Interrupt, Video, DVD
IRQ 12	PS/2 Mouse
IRQ 13	Numeric Coprocessor
IRQ 14	Primary IDE Interface
IRQ 15	Secondary IDE Interface

Back to Top

System I/O

Models: 2250 Series, 2410 ES, 2510

System I/O	
I/O Address (Hex)	System Function (Shipping Configuration)
0000h - 000Fh	Direct Memory Access (DMA) Controller
0020h - 0021h	Programmable Interrupt Controller
0040h - 0043h	System Timer
0060h - 0060h	Standard 101/102-Key or Microsoft Natural Keyboard
0061h - 0061h	System Speaker
0064h - 0064h	Standard 101/102-Key or Microsoft Natural Keyboard
0070h - 0071h	System CMOS/Real Time Clock
0080h - 0080h	Motherboard Resources
0081h - 008Fh	Direct Memory Access (DMA) Controller
00A0h - 00A1h	Programmable Interrupt Controller
00C0h - 00DFh	Direct Memory Access (DMA) Controller
00ECh - 00EFh	Motherboard Resources
00F0h - 00FFh	Numeric Data Processor
0170h - 0177h	Standard IDE/ESDI Hard Disk Controller
01F0h - 01F7h	Standard IDE/ESDI Hard Disk Controller
0201h - 0201h	Gameport Joystick
0220h - 022Fh	XpressAUDIO 16-bit sound
02F8h - 02FFh	Compaq 336-Dfi, 56K Upgradable Modem
0330h - 0331h	XpressAUDIO 16-bit sound
0376h - 0376h	Standard IDE/ESDI Hard Disk Controller
I/O Address (Hex)	System Function (Shipping Configuration)
0378h - 037Fh	Printer Port (LPT1)
0388h - 038Bh	XpressAUDIO 16-bit sound
03B0h - 03BBh	Cyrix GX
03C0h - 03DFh	Cyrix GX
03F0h - 03F5h	Standard Diskette Drive Controller
03F6h - 03F6h	Standard IDE/ESDI Hard Disk Controller
03F7h - 03F7h	Standard Diskette Drive Controller
03F8h - 03FFh	Communications Port (COM1)
0480 - 048Fh	Motherboard Resources
04D0h - 04D1h	Motherboard Resources
0CF8h - 0CFFh	PCI bus
10ECh - 10EFh	Motherboard Resources
20ECh - 20EFh	Motherboard Resources
3000h - 303Fh	PCI Standard ISA Bridge
30ECh - 30EFh	Motherboard Resources
4000h - 400Fh	Motherboard Resources
40ECh - 40EFh	Motherboard Resources
50ECh - 50EFh	Motherboard Resources
60ECh - 60EFh	Motherboard Resources
70ECh - 70EFh	Motherboard Resources
80ECh - 80EFh	Motherboard Resources
90ECh - 90EFh	Motherboard Resources
A0ECh - A0EFh	Motherboard Resources
B0ECh - B0EFh	Motherboard Resources
C0ECh - C0EFh	Motherboard Resources
D0ECh - D0EFh	Motherboard Resources
E0ECh - E0EFh	Motherboard Resources
F0ECh - F0EFh	Motherboard Resources

Back to Top

System Memory

Models: 2250 Series, 2410 ES, 2510

System Memory	
Memory Address	System Function
000000000h - 0009FFFFh	System Board extension for PnP BIOS
000A0000h - 000AFFFFh	Cyrix GX
000C0000h - 000C7FFFh	Cyrix GX
000E0000h - 000FFFFFFh	System Board extension for PnP BIOS
001000000h - 00DDFFFFh	System Board extension for PnP BIOS
400000000h - 4FFFFFFFh	Motherboard Resources
FFFC0000h - FFFFFFFFh	Motherboard Resources

Back to Top

Power Supply

Models: 2250 Series, 2410 ES, 2510

Power Supply		
	U. S.	Metric
Input Specifications		
Nominal Line Voltage	180 to 264 VAC	180 to 264 VAC
Range Input Line	90 to 132 VAC	90 to 132 VAC
Frequency Range	47 to 63 Hz	47 to 63 Hz
Power Factor	0.6	0.6
Input Power	280 Watts	280 Watts
Input Current	3.0 at 90 VAC	3.0 at 180 VAC
Inrush Current	60 A at 132 VAC (cold start)	60 A at 264 VAC (cold start)
Holdup Time	16 ms from zero crossing at 120 VAC	16 ms from zero crossing at 240 VAC
General Specifications		
Full Output Rating	To 122° F and 5,000 ft To 90° F and 10,000 ft (derate linearly)	
Minimum Load	3.0 A on + 5.0 V output; 0.04 A on 12 V output	
Ambient Temperature Range		
Operating	50° to 122° F	10° to 50° C
Storage	-40° to 151° F	-40° to 66° C
Dielectric Voltage Withstand		
Input to Ground	2500 VAC/1 second	
Safety Standard	UL 1950; CSA 22.2 #950 or CSA 22.2 #234; TUV/VDE EN 60 950 (VDE0805/11.91); EMKO-TSE (74-SEC) 207/93	
Input Transient Susceptibility		
Common and Differential Mode (superimposed on AC line)	2500 V, 1 us, damped sinusoid 600 V, 10 us pulse	
Differential Mode	20% step change in AC input voltage	

Maintenance & Service Guide
Presario 2250 Series
2510, 2410 ES & 4240 ES Personal Computers

Diskette Drive Specifications

Diskette Drive	
Diskettes	
Size (in)	3.5
High Density (MB)	1.44
Low Density (KB)	720
LED	Green
Height	One-third
Bytes per Sector	512
Sectors per Track	
High Density	18
Low Density	9
Tracks per Side	
High Density	80
Low Density	80
Read/Write Heads	2
Average Seek Time (Ms/s)	
Track-to-Track (high/low)	3/3
Average (high/low)	94/94
Settling Time (ms)	15
Latency Average (ms)	100

Back to Top

3.2-GB Hard Drive Specifications

3.2 GB Hard Drive	
	3.2-GB-3.5"
Compaq Part Number	262477
Formatted Capacity Physical (MB) Logical (MB)	3227.1 3227.1
Drive Type	65
Transfer Rate Media (Mbits/sec) Interface (Mbytes/sec)	87.8 16.67
Typical Seek Time (including settling) Single Track (ms) Average (ms) Full Stroke (ms)	2.0 12.0 20.0
Disk Rotational Speed (RPM)	4500
Cylinders Physical Logical	5690 6253
Data Heads Physical Logical	6 16
Sectors per Track Physical Logical	114-234 63
Buffer Size (KB)	128

Back to Top

4.0-GB Hard Drive Specifications

4.0-GB Hard Drive	
	4.0-GB-3.5"
Compaq Part Number	286118
Formatted Capacity Physical (MB) Logical (MB)	4018 4018
Drive Type	65
Transfer Rate Media (Mbits/sec) Interface (Mbytes/sec)	87.8 16.67
Typical Seek Time (including settling) Single Track (ms) Average (ms) Full Stroke (ms)	2.0 12.0 21.0
Disk Rotational Speed (RPM)	4500
Cylinders Physical Logical	5690 7787
Data Heads Physical Logical	8 16
Sectors per Track Physical Logical	114-234 63
Buffer Size (KB)	128

Back to Top

6.0-GB Hard Drive Specifications

6.0-GB Hard Drive	
	6.0-GB. 5.25"
Compaq Part Number	241139
Formatted Capacity Physical (MB) Logical (MB)	6511 6505
Drive Type	65
Transfer Rate Media (Mbits/sec) Interface (Mbytes/sec)	Zone 1 - 92.61 Zone 15 - 16.67
Typical Seek Time (including settling) Single Track (ms) Average (ms) Full Stroke (ms)	3.0 13.0 25.0
Disk Rotational Speed (RPM)	3600
Cylinders Physical Logical	8895 13446
Data Heads Physical Logical	6 15
Sectors per Track Physical Logical	170-288 63
Buffer Size (KB)	512

Back to Top

8.0-GB Hard Drive Specifications

8.0 GB Hard Drive	
	8.0-GB-3.5"
Compaq Part Number	286123
Formatted Capacity Physical (MB) Logical (MB)	8037.7 8037.7
Drive Type	65
Transfer Rate Media (Mbits/sec) Interface (Mbytes/sec)	91.3-141.7 33
Typical Seek Time (including settling) Single Track (ms) Average (ms) Full Stroke (ms)	2.5 12.0 24.0
Disk Rotational Speed (RPM)	4000
Cylinders Physical Logical	11490 15574
Data Heads Physical Logical	4 16
Sectors per Track Physical Logical	403-261 63
Buffer Size (KB)	128

Back to Top

32x CD Drive Specifications

32x CD Drive	
Applicable Disc CD-ROM CD-DA CD-XA Photo CD Cdi	Mode 1 and Mode 2 Mixed Mode, Audio and Data Combined Ready Single and Multiple Session Ready
Block Size CD-ROM Mode 1 CD-ROM Mode 2 CD-DA CD-XA	2048 bytes 2340, 2336 bytes 2352 bytes 2328 bytes
Center Hole	15 mm diameter
Diameter	12 cm, 8 cm
Rotational Speed	4200 RPM, 8X spindle speed
Thickness	1.2 mm
Track Pitch	1.6 µm
Laser Beam Divergence Output Power Type Wave Length	53.5° +/- 1.5° 0.14 mW Semiconductor laser GaAlAs 780 nm +/- 25 nm
Access Time Random Full Stroke	< 100 ms < 170 ms
Audio Output Level Line Out Headphone	0.7 V (RMS) at 47 kW 0.7 V (RMS) at 32 W
Cache Buffer	128 KB
Data Transfer Rate Sustained Burst	150 KB/sec (single) 2100 - 4800 KB/sec (8X-16X variable) 16.67 MB/sec
Interface Cable Length (Max)	18 in
Startup Time Single Multi-session	< 7 sec < 30 sec
Stop Time	< 4 sec

Back to Top

DVD Drive Specifications

DVD Drive		
Applicable Disc DVD-5, DVD-9, DVD-10, DVD-18 CD-ROM CD-DA CD-XA Photo CD CD-I Ready CD-Bridge CD-R	Mode 1 and Mode 2 Audio Mode 2, Form 1 and 2 Single and Multiple Session	
Block Size CD-ROM Mode 0 CD-ROM Mode 1 CD-ROM Mode 2 DVD	2352 bytes 2352, 2340, 2336, 2048 bytes 2352,2340, 2336, 2048 bytes 2048 bytes	
Center Hole	15 mm diameter	
Diameter	12 cm, 8 cm	
Thickness	1.2 mm	
Track Pitch	1.6 µm	
Laser Beam Divergence Output Power Type Wave Length	53.5 degrees +/- 1.5 degrees 5 mW Semiconductor laser GaAlAs 650 nm +/- 25 nm (DVD) 795 nm +/- 25 nm (CD)	
Access Time Random Full Stroke	DVD < 150 ms < 225 ms	CD < 100 ms < 225 ms
Audio Output Level Line Out Headphone	1.0 V (RMS) at 47 kW 0.7 V (RMS) at 32 W	
Cache Buffer	128 KB	
Sustained Data Transfer Rate	150 KB/sec (single, CD-ROM mode) 1200-3000 KB/sec (20× CAV CD-ROM mode) 2760 KB/sec (DVD mode)	
Interface Cable Length (Max)	18 in	
Startup Time	< 15 sec	
Stop Time	< 2 sec	

Back to Top

56 K Modem Specifications

Modem 56 Kbps	
Maximum Data Speed (Kbps)	56 Kbps*
Maximum Fax Speed	14.4 Kbps
Data	V.90, K56flex, V.34 (33.6 Kbps), V32terbo (19.2 Kbps), V.32bis (14.4 Kbps), V.32, V.22bis, V.22, V.21, Bell 212A, Bell 103
Error Correction	V.42bis, V.42, LAPM, and MNP 2-5
Fax	V.17, V.29, V.27ter, V.21 Channel 2, Class 1 command set, Group III FAX

* Both K56flex and V.90 are designed only to allow faster downloads from K56Flex or V.90-compliant digital sources. Maximum achievable download transmission rates are currently unknown, may not reach 56 Kbps, and will vary with the line condition.

Back to Top

33.6 Kbps Modem Specifications

Modem 33.6 DFi (upgradable to 56K)	
Maximum Data Speed (Kbps)	33.6 DFi, upgradable to 56K
Maximum Fax Speed	14.4 Kbps
Data	V.34 (33.6 Kbps), V.32terbo (19.2 Kbps), V.32bis (14.4 Kbps), V.32, V.22bis, V.22, V.21, Bell 212A, Bell 103
Error Correction	V.42bis, V.42, LAPM, and MNP 2-5
Fax	V.17, V.29, V.27ter, V.21 Channel 2, Class 1 command set, Group III FAX

Back to Top

Connector Pin Assignments

Parallel
Serial
Universal Serial Bus (USB)
Keyboard
Mouse
VGA Monitor
MIDI/Joystick
Line-in
Speaker/Headphone Out
Microphone
Phone Line to Wall
Phone Line to Phone
CD-Drive Data Cable
Modem

This section contains the connector pin assignments for the Compaq 2250, 2510, 2410 ES and 4240 ES Series of Personal Computers.

Parallel Connector

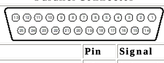

Pin	Signal	Pin	Signal
1	Strobe*	10	Acknowledge*
2	Data Bit 0	11	Busy
3	Data Bit 1	12	Paper Out
4	Data Bit 2	13	Select
5	Data Bit 3	14	Auto Linefeed*
6	Data Bit 4	15	Error*
7	Data Bit 5	16	Initialize Printer*
8	Data Bit 6	17	Select In*
9	Data Bit 7	18-25	Signal Ground

* = Active low

Back to Top

Serial Connector

Connector	Pin	Signal
	1	Carrier Detect
	2	Receive Data
	3	Transmit Data
	4	Data Terminal Ready
	5	Signal Ground
	6	Data Set Ready
	7	Ready to Send
	8	Clear to Send
	9	Ring Indicator

Universal Serial Bus

Connector	Pin	Signal
	1	- Data
	2	+Data
	3	Ground
	4	+5 VDC

Keyboard

Connector	Pin	Signal
	1	Data
	2	Unused
	3	Ground
	4	+5 VDC
	5	Clock
	6	Unused

Mouse

Connector	Pin	Signal
	1	Data
	2	Unused
	3	Ground
	4	+5 VDC
	5	Clock
	6	Unused

Back to Top

VGA Monitor

Connector	Pin	Signal
	1	Red Analog
	2	Green Analog
	3	Blue Analog
	4	Volume Up
	5	Ground
	6	Ground Analog
	7	Ground Analog
	8	Ground Analog
	9	+5 VDC
	10	Ground
	11	Volume Down
	12	DDC Data
	13	Horizontal Sync
	14	Vertical Sync
	15	DDC Clock

MIDI/Joystick

Connector	Pin	Signal
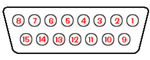	1	+5 VDC
	2	Fire A (1)
	3	X-Axis (1)
	4	GND
	5	GND
	6	Y-Axis (1)
	7	Fire B (1)
	8	+5 VDC
	9	+5 VDC
	10	Fire A (2)
	11	X-Axis (2)
	12	MIDI Out
	13	Y-Axis (2)
	14	Fire B (2)
	15	MIDI In

Back to Top

Line In

Connector	Connector
	Stereo 1/8" Miniphone

Speaker/Headphone Out

Connector	Connector
	Stereo 1/8" Miniphone

Microphone

Connector	Connector
	Stereo 1/8" Miniphone

Phone Line to Wall Jack

Connector	Pin	Signal
	1	Unused
	2	Tip
	3	Ring
	4	Unused

Phone Line to Phone

Connector	Pin	Signal
	1	Unused
	2	Tip
	3	Ring
	4	Unused

Back to Top

CD Drive Data Cable

Pin	Signal	Pin	Signal
1	RESET	21	DMARK
2	GND	22	GND
3	DD7	23	-DIOW
4	DD8	24	GND
5	DD6	25	-DIOR
6	DD9	26	GND
7	DD5	27	IORDY
8	DD10	28	SPSYNC
9	DD4	29	-DMACK
10	DD11	30	GND
11	DD3	31	INTRQ
12	DD12	32	-IOCS16
13	DD2	33	DA0
14	DD13	34	-PDIA6
15	DD1	35	DA0
16	DD14	36	DAZ
17	DD0	37	-CS1FX
18	DD15	38	-C53FX
19	GND	39	-DASP
20	(KEY)	40	GNP

Internal Fax/Modem

Pin	Signal	Pin	Signal
1	Unused	4	Tip
2	Unused	5	Unused
3	Ring	6	Unused

Power Cord Set Requirements

The voltage select switch feature on the computer allows it to operate from any line voltage between 120 or 240 volts AC.

The power cord set (flexible cord and wall plug) sent with the computer meets the requirements for use in the country where the computer was purchased.

Power cord sets for use in other countries must meet the requirements of the country where the computer is used. For more information on power cord set requirements, contact a Compaq authorized dealer, reseller, or service provider.

General Requirements

The requirements listed below are applicable to all countries:

1. The length of the power cord set must be at least 6.00 feet (1.8 m) and a maximum of 9.75 feet (3.0 m).

2. All power cord sets must be approved by an acceptable accredited agency responsible for evaluation in the country where the power cord set will be used.

3. The power cord set must have a minimum current capacity of 10A and a nominal voltage rating of 125 or 250 volts AC, as required by each country's power system.

4. The appliance coupler must meet the mechanical configuration of an EN 60 320/IEC 320 Standard Sheet C13 connector, for mating with appliance inlet on the Switch Box.

Country-Specific Requirements

Power Cord Set Requirements by Country		
Country	Accredited Agency	Applicable Note Numbers
Australia	EANSW	1
Austria	OVE	1
Belgium	CEBC	1
Canada	CSA	2
Denmark	DEMKO	1
Finland	SETI	1
France	UTE	1
Germany	VDE	1
Italy	IMQ	1
Japan	JIS	3
Norway	NEMKO	1
Sweden	SEMKO	1
Switzerland	SEV	1
United Kingdom	BSI	1
United States	UL	2

NOTES:

1. The flexible cord must be <HAR> Type HO3VV-F, 3-conductor, 1.0 mm2 conductor size. Power cord set fittings (appliance coupler and wall plug) must bear the certification mark of the agency responsible for evaluation in the country where it will be used.

2. The flexible cord must be Type SJT-2 or equivalent, No. 18 AWG, 3-conductor. The wall plug must be a two-pole grounding type with a NEMA 5-15P (15A, 125V) or NEMA 6-15P (15A, 250V) configuration.

3. The appliance coupler, flexible cord, and wall plug must bear a "T" mark and registration number in accordance with the Japanese Dentori Law. Flexible cord must be Type VCT or VCTF, 3-conductor, 0.75mm2 conductor size. The wall plug must be a two-pole type with a Japanese Industrial Standard C8303 (15A, 125V) configuration.